DRAWING LIST FOR TEST PACKAGE

IW-647

PROJECT NO.: 22328D

PROJECT TITLE : M15X Ph2 Project

No	PKG No	UNIT	LINE NUMBER			P&ID		REMARK
			ISO DRAWING No	SHEET	REV	P&ID No	REV	
1	647	R1FA	20A-IW-ST1-C-7008-01	1 OF 1	1	CJ-M15W13-PR-A20-000081	2	
2	647	R1FA	20A-IW-ST1-C-7009-01	1 OF 1	1	CJ-M15W13-PR-A20-000081	2	
3	647	R1FA	20A-IW-ST1-C-7010-01	1 OF 1	1	CJ-M15W13-PR-A20-000081	2	
4	647	R1FA	20A-IW-ST1-C-7015-01	1 OF 1	1	CJ-M15W13-PR-A20-000081	2	
5	647	R1FA	20A-IW-ST1-C-7016-01	1 OF 1	1	CJ-M15W13-PR-A20-000081	2	
6	647	R1FA	20A-IW-ST1-C-7019-01	1 OF 1	1	CJ-M15W13-PR-A20-000081	2	
7	647	R1FA	20A-IW-ST1-C-7020-01	1 OF 1	1	CJ-M15W13-PR-A20-000081	2	
8	647	R1FA	25A-IW-ST1-C-7032-01	1 OF 1	0	CJ-M15W13-PR-A20-000081	2	
9	647	R1FA	25A-IW-ST1-C-7033-01	1 OF 1	0	CJ-M15W13-PR-A20-000081	2	
10	647	R1FA	25A-IW-ST1-C-7034-01	1 OF 1	0	CJ-M15W13-PR-A20-000081	2	
11	647	1FA	50A-IW-ST1-C-7027-01	1 OF 1	0	CJ-M15W13-PR-A20-000081	2	
12	647	R1MF	20A-IW-ST1-C-7011-01	1 OF 1	1	CJ-M15W14-PR-A20-000011	2A	
13	647	R1MF	20A-IW-ST1-C-7012-01	1 OF 1	0	CJ-M15W14-PR-A20-000011	2A	
14	647	R1MF	20A-IW-ST1-C-7013-01	1 OF 1	0	CJ-M15W14-PR-A20-000011	2A	
15	647	R1MF	20A-IW-ST1-C-7014-01	1 OF 1	0	CJ-M15W14-PR-A20-000011	2A	
16	647	R1MF	25A-IW-ST1-C-7028-01	1 OF 1	0	CJ-M15W13-PR-A20-000081	2	
17	647	R1MF	40A-IW-ST1-C-7004-01	1 OF 4	1	CJ-M15W13-PR-A20-000081	2	
18	647	R1MF	40A-IW-ST1-C-7004-02	2 OF 4	1	CJ-M15W13-PR-A20-000081	2	
19	647	R1MF	40A-IW-ST1-C-7004-03	3 OF 4	0	CJ-M15W13-PR-A20-000081	2	

DRAWING LIST FOR TEST PACKAGE

IW-647

PROJECT NO.: 22328D

PROJECT TITLE : M15X Ph2 Project

No	PKG No	UNIT	LINE NUMBER			P&ID		REMARK
			ISO DRAWING No	SHEET	REV	P&ID No	REV	
20	647	R1MF	40A-IW-ST1-C-7004-04	4 OF 4	0	CJ-M15W13-PR-A20-000081	2	
21	647	R1MF	40A-IW-ST1-C-7006-01	1 OF 4	1	CJ-M15W14-PR-A20-000502	1A	
22	647	R1MF	40A-IW-ST1-C-7006-02	2 OF 4	1	CJ-M15W14-PR-A20-000502	1A	
23	647	R1MF	40A-IW-ST1-C-7006-03	3 OF 4	0	CJ-M15W14-PR-A20-000502	1A	
24	647	R1MF	40A-IW-ST1-C-7006-04	4 OF 4	0	CJ-M15W14-PR-A20-000502	1A	
25	647	1MF	50A-IW-ST1-C-7026-01	1 OF 1	1	CJ-M15W13-PR-A20-000081	2	
26	647	1MF	50A-IW-ST1-C-7027-01	1 OF 1	0	CJ-M15W13-PR-A20-000081	2	
27	647	R2FA	20A-IW-ST1-C-7017-01	1 OF 1	1	CJ-M15W14-PR-A20-000011	2A	
28	647	R2FA	20A-IW-ST1-C-7018-01	1 OF 1	1	CJ-M15W14-PR-A20-000011	2A	
29	647	R2FA	25A-IW-ST1-E-7007-01	1 OF 1	0	CJ-M15W14-PR-A20-000506	1A	
30	647	R2FA	25A-IW-ST1-C-7023-01	1 OF 1	1	CJ-M15W13-PR-A20-000081	2	
31	647	R2FA	25A-IW-ST1-C-7024-01	1 OF 1	1	CJ-M15W13-PR-A20-000081	2	
32	647	R2FA	25A-IW-ST1-C-7029-01	1 OF 1	1	CJ-M15W13-PR-A20-000081	2	
33	647	R2FA	40A-IW-ST1-C-7003-01	1 OF 1	1	CJ-M15W14-PR-A20-000502	1A	
34	647	R2FA	50A-IW-ST1-E-7026-01	1 OF 1	0	CJ-M15W13-PR-A20-000081	2	
35	647	2FA	100A-IW-ST1-E-7025-01	1 OF 2	1	CJ-M15W13-PR-A20-000081	2	
36	647	2FA	100A-IW-ST1-E-7025-02	2 OF 2	1	CJ-M15W13-PR-A20-000081	2	
37	647	R2FA	100A-IW-ST1-E-7035-01	1 OF 1	0	CJ-M15W14-PR-A20-000507	1A	

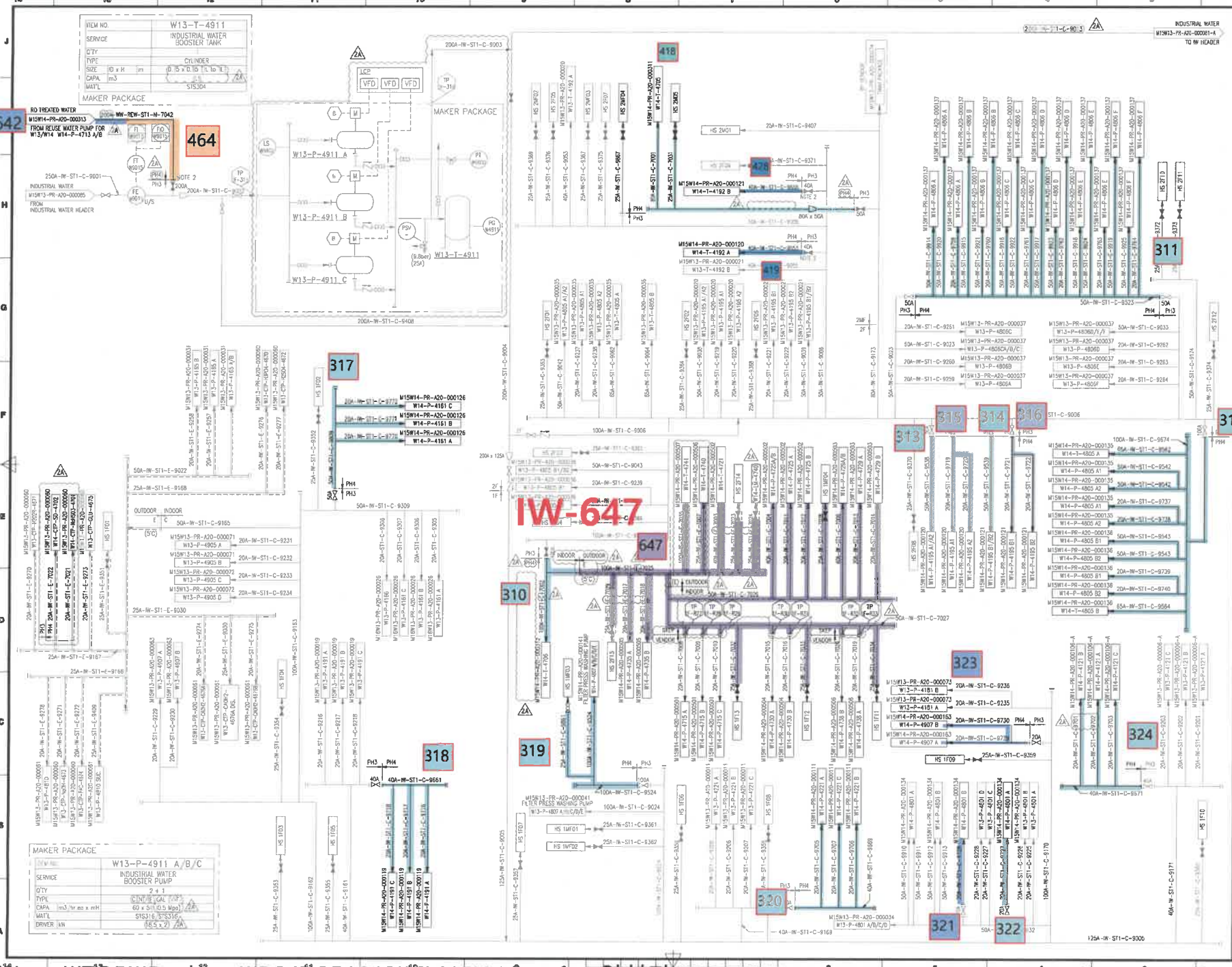

C:\Users\WTOPWDesktopWP&ID251013\[M15X-Ph4 for 인허가]CAD FILE_0910\CJ-M15W13-PR-A20-000081 R2 UDD FOR INDUS

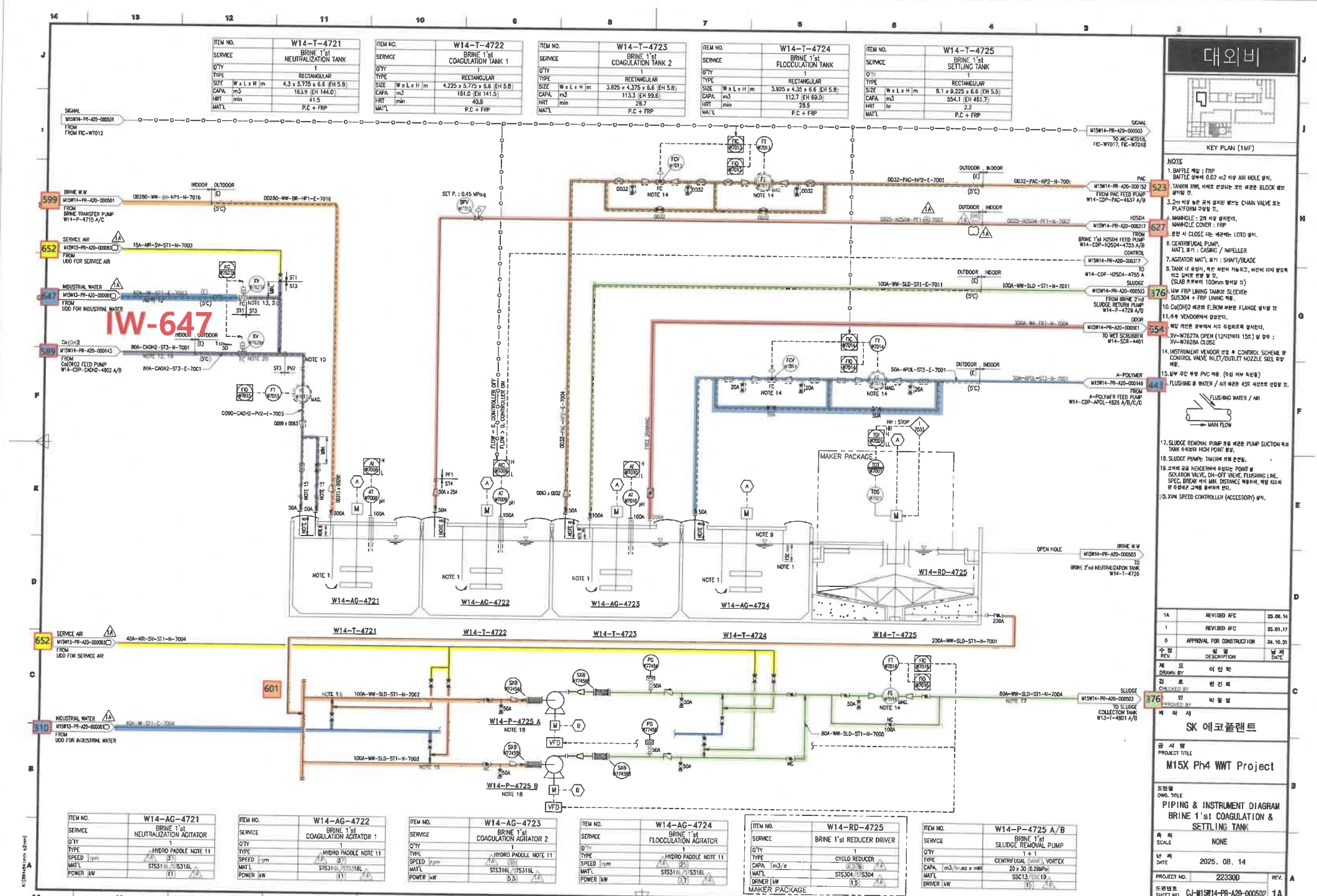

C:WUsersWTOPWDesktopWP&ID251013WIM15X Ph 4 for 외허가ICAD FILE_0910WCJ-M15W14-PR-A20-000502 R1 P&ID FOR BRINE

ITEM NO.	W14-T-4726
SERVICE	BRINE 2'nd NEUTRALIZATION TANK
Q'TY	1
TYPE	RECTANGULAR
SIZE W x L x H m	4.1 x 5.775 x 6.6 (EH 5.0)
CAPA. m3	156.3 (EH 118.4)
HRT min	34.1
MAT'L	P.C + FRP

ITEM NO.	W14-T-4727
SERVICE	BRINE 2'nd COAGULATION TANK
Q'TY	1
TYPE	RECTANGULAR
SIZE W x L x H m	4.2 x 5.775 x 6.6 (EH 5.0)
CAPA. m3	150.1 (EH 121.3)
HRT min	34.9
MAT'L	P.C + FRP

ITEM NO.	W14-T-4728
SERVICE	BRINE 2'nd FLOCCULATION TANK
Q'TY	1
TYPE	RECTANGULAR
SIZE W x L x H m	4.7 x 5.775 x 6.6 (EH 5.0)
CAPA. m3	179.1 (EH 135.7)
HRT min	39.1
MAT'L	P.C + FRP

ITEM NO.	W14-T-4729
SERVICE	BRINE 2'nd SETTLING TANK
Q'TY	1
TYPE	RECTANGULAR
SIZE W x L x H m	9.225 x 9.225 x 6.6 (EH 5.0)
CAPA. m3	561.7 (EH 425.5)
HRT hr	2.0
MAT'L	P.C + FRP

ITEM NO.	W14-LP-4729
SERVICE	LAMELLAR PLATE
Q'TY	1
CAPA. W x L x H m	BY VENDOR
SURFACE LOAD	20 m3/m2.d 이하 Qmax : 5,000m3/d
MAT'L	ABS+SS304

MAKER PACKAGE

대외비

KEY PLAN (1MF)

NOTE

1. BAFFLE 재질 : FRP
   BAFFLE 상부에 0.02 m2 이상 AIR HOLE 설치.
2. TANK의 HWL 이하로 연결되는 모든 배관은 BLOCK 밸브 설치할 것.
3. 2m 이상 높은 곳에 설치된 밸브는 CHAIN VALVE 또는 PLATFORM 구성할 것.
4. MANHOLE : 2개 이상 설치한다.
   MANHOLE COVER : FRP
5. 문은 시 CLOSE 되는 배관에는 LOTO 설치.
6. CENTRIFUGAL PUMP,
   MAT'L 표기 : CASING / IMPELLER
7. AGITATOR MAT'L 표기 : SHAFT/BLADE
8. TANK 내 유입수, 측인 피이어 가능하고, 배관이 되지 않도록 되도 없이도 변형 될 것.
   (SLAB 으로부터 100mm 정하일 것)
9. 내부 FRP LINING TANK의 SLEEVE는 SUS304 + FRP LINING 처음.
10. 위의 모수들의 상세사항은 추후 VENDOR에서 결정한다.
11. INSTRUMENT VENDOR 선정 후 CONTROL SCHEME 및 CONTROL VALVE INLET/OUTLET NOZZLE SIZE 재정 예정.
12. FLUSHING 용 WATER / AIR 배관은 45도 이상으로 연결될 것.

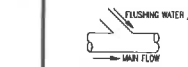

13. SLUDGE REMOVAL PUMP 포함 배관은 PUMP SUCTION 측의 TANK 수위보다 HIGH POINT 형성.
14. DELETED.
15. 추후 VENDOR에서 결정한다.
16. DELETED.
17. DELETED.
18. DELETED.
19. 장치된 펌프 및 유지관리사양을 PACKAGE VENDOR 공급범위에 포함될 것.
20. SLUDGE PUMP는 TIMER에 의해 운전됨.

REV.	정 정 DESCRIPTION	날 짜 DATE
1A	REVISED AFC	25.08.14
1	REVISED AFC	25.01.17
0	APPROVAL FOR CONSTRUCTION	24.10.31

도 DRAWN BY	이 인 락
토 CHECKED BY	한 진 희
인 APPROVED BY	박 동 영
작 사	SK 에코플랜트
사 명 PROJECT TITLE	M15X Ph4 WWT Project
도면명 DWG. TITLE	PIPING & INSTRUMENT DIAGRAM BRINE 2'nd COAGULATION & SETTLING TANK
축 척 SCALE	NONE
날 짜 DATE	2025. 08. 14
PROJECT NO.	22330D
도면번호 SHEET NO.	CJ-M15W14-PR-A20-000503
REV.	1A

ITEM NO.	W14-AG-4726
SERVICE	BRINE 2'nd NEUTRALIZATION AGITATOR
Q'TY	1
TYPE	HYDRO PADDLE NOTE 15
SPEED r/m	37
MAT'L	STS316L /STS316L
POWER kW	

ITEM NO.	W14-AG-4727
SERVICE	BRINE 2'nd COAGULATION AGITATOR
Q'TY	1
TYPE	HYDRO PADDLE NOTE 15
SPEED r/m	30
MAT'L	STS316L /STS316L
POWER kW	

ITEM NO.	W14-AG-4728
SERVICE	BRINE 2'nd FLOCCULATION AGITATOR
Q'TY	1
TYPE	HYDRO PADDLE NOTE 15
SPEED r/m	20
MAT'L	STS316L /STS316L
POWER kW	

MAKER PACKAGE

ITEM NO.	W14-RD-4729
SERVICE	BRINE 2'nd REDUCER DRIVER
Q'TY	1
TYPE	CYCLO REDUCER
CAPA. m3/d	0.19
MAT'L	STS304 /STS304
POWER kW	1.5

ITEM NO.	W14-P-4729 A/B
SERVICE	BRINE 2'nd SLUDGE RETURN PUMP
Q'TY	1 + 1
TYPE	CENTRIFUGAL (MAG.), VORTEX
CAPA. m3/hr.ea x mH	40 x 30 (0.29MPa)
MAT'L	SSC13/SSC19
POWER kW	

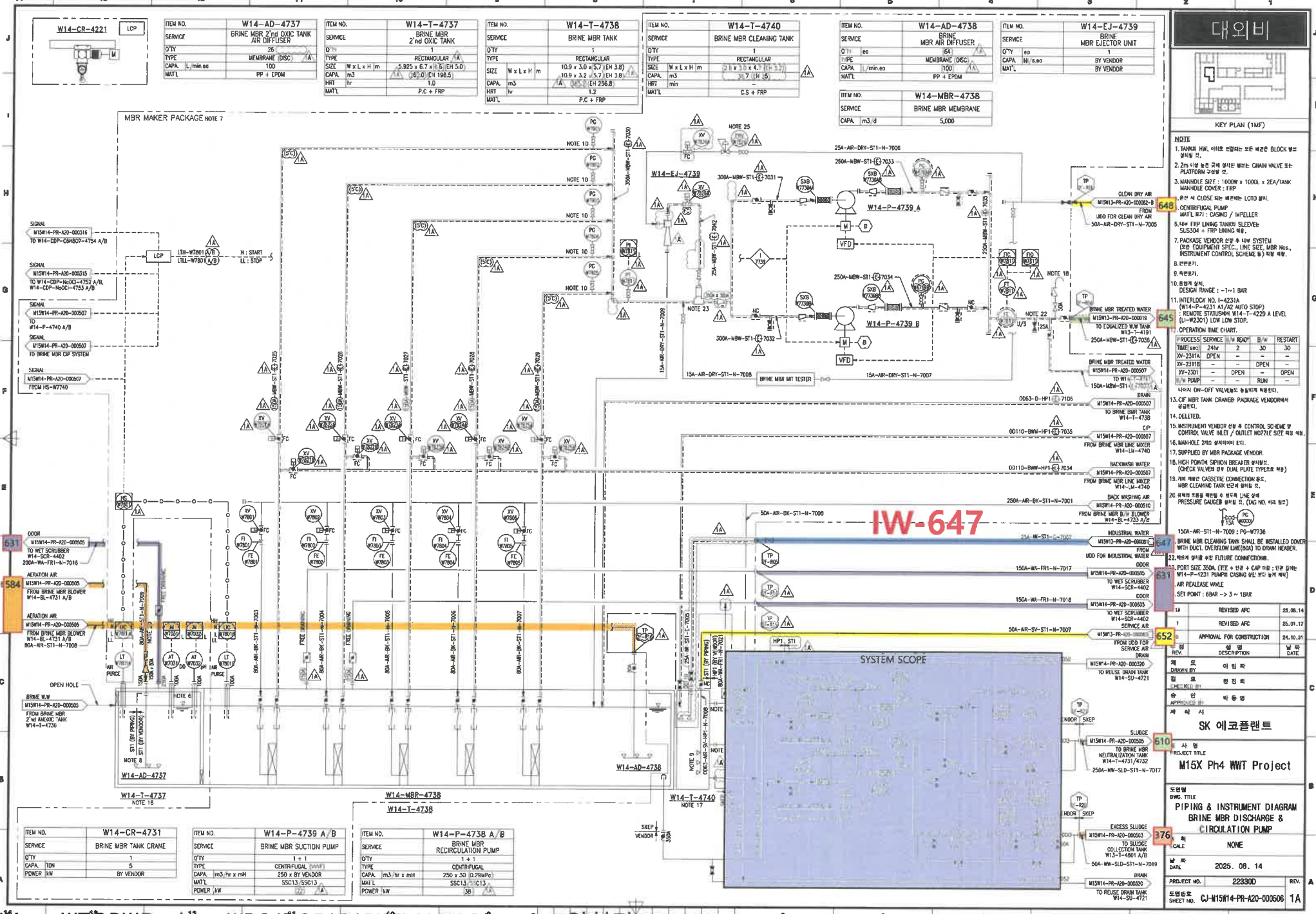

C:₩Users₩TOPW₩Desktop₩P&ID₩251013₩[M15X Ph 4 for 원하기]CAD FILE_0910₩CJ-M15W14-PR-A20-000506 R1 P&ID FOR BRINE

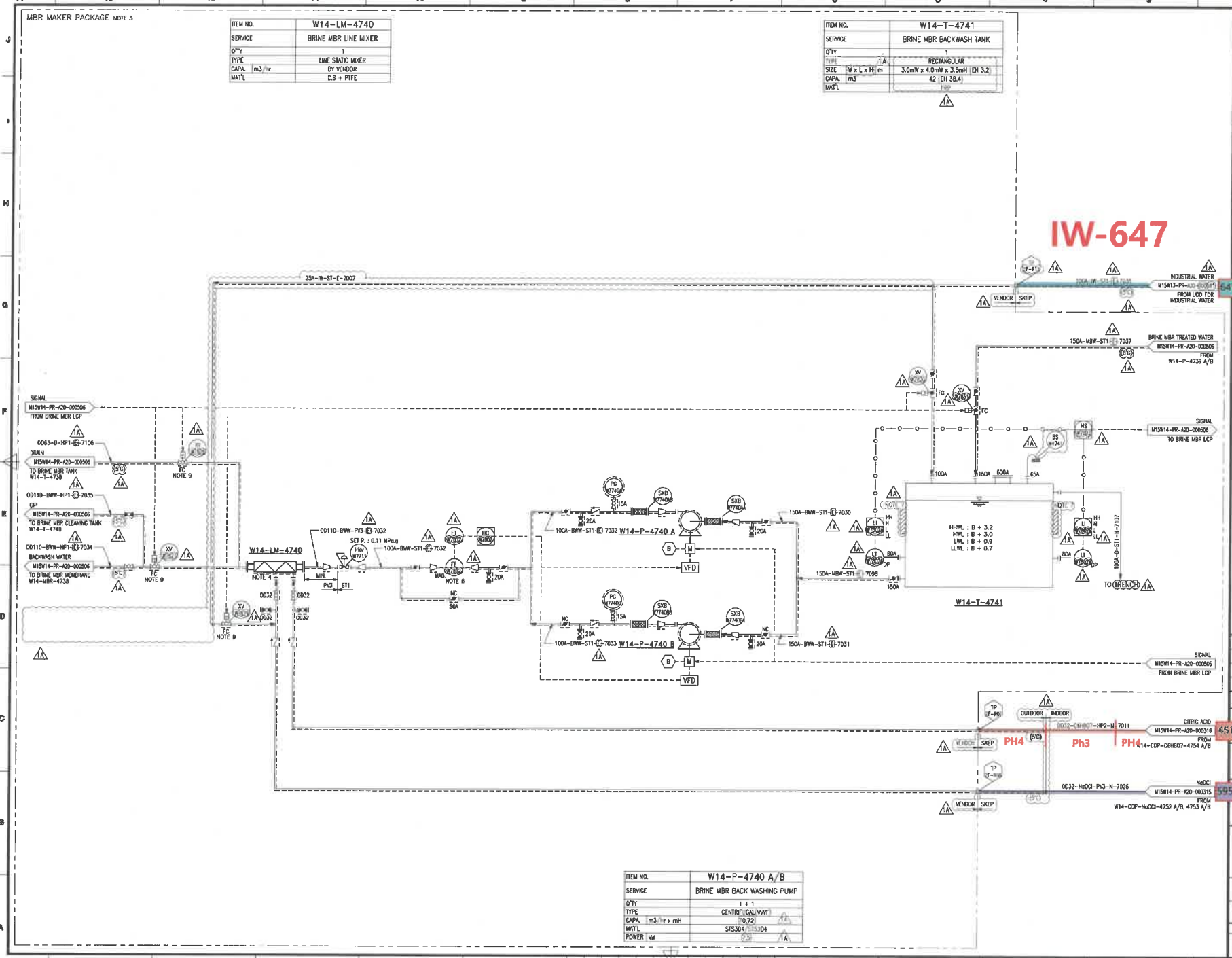

대외비

KEY PLAN (2F)

NOTE
1. 운전 시 CLOSE 하는 밸브에는 LOTO 설치.
2. CENTRIFUGAL PUMP. MAT'L 표기 : CASING / IMPELLER
3. PACKAGE VENDOR 선정 후 내부 SYSTEM (모든 EQUIPMENT SPEC., LINE SIZE, INSTRUMENT CONTROL SCHEME 등) 확정 예정.
4. 박종주입 배관은 MIXER 하류쪽으로 연결될 것.
5. DELETED.
6. INSTRUMENT VENDOR 선정 후 CONTROL SCHEME 및 CONTROL VALVE INLET / OUTLET NOZZLE SIZE 확정 예정.
7. INSULATION 내용이 적용

REV.	DESCRIPTION	DATE
1A	REVISED AFC	25.08.14
1	REVISED AFC	25.01.17
0	APPROVAL FOR CONSTRUCTION	24.10.31

DRAWN BY 이 민 학
CHECKED BY 한 진 희
APPROVED BY 박 종 영

제 작 사 SK 에코플랜트

PROJECT TITLE M15X Ph4 WWT Project

DWG. TITLE PIPING & INSTRUMENT DIAGRAM BRINE MBR BACK WASHING PUMP

SCALE NONE

DATE 2025. 08. 14

PROJECT NO. 22330D REV. A

SHEET NO. CJ-M15W14-PR-A20-000507 1A

C:₩Users₩TOP₩Desktop₩P&ID251013₩[M15X-Ph-4 for 인허가]CAD FILE_0910₩CJ-M15W14-PR-A20-000507 R1 P&ID FOR BRINE

SEAL PLAN 32
FOR EACH SEAL FLUSHING SYSTEM

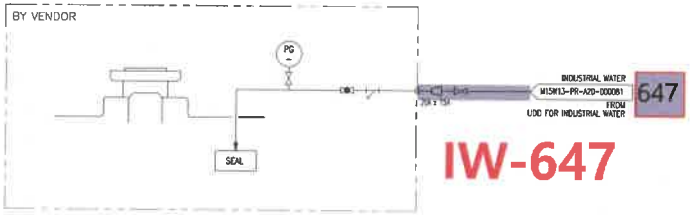

ITEM NO.	P&ID NO.	PG	EXTERNAL SEAL FLUID LINE NO.
W14-P-4106 A1	M15W14-PR-A20-000102	PG-W8156A1	20A-IW-ST1-C-9741
W14-P-4106 A2	M15W14-PR-A20-000102	PG-W8156A2	20A-IW-ST1-C-9742
W14-P-4110 A1	M15W14-PR-A20-000103	PG-W8160A1	20A-IW-ST1-C-9743
W14-P-4110 A2	M15W14-PR-A20-000103	PG-W8160A2	20A-IW-ST1-C-9744
W14-P-4106 B1	M15W14-PR-A20-000104	PG-W8156B1	20A-IW-ST1-C-9745
W14-P-4106 B2	M15W14-PR-A20-000104	PG-W8156B2	20A-IW-ST1-C-9746
W14-P-4110 B1	M15W14-PR-A20-000105	PG-W8160B1	20A-IW-ST1-C-9747
W14-P-4110 B2	M15W14-PR-A20-000105	PG-W8160B2	20A-IW-ST1-C-9748
W14-P-4121 A	M15W14-PR-A20-000106-A	PG-W8171A	20A-IW-ST1-C-9701
W14-P-4121 B	M15W14-PR-A20-000106-A	PG-W8171B	20A-IW-ST1-C-9702
W14-P-4121 C	M15W14-PR-A20-000106-A	PG-W8171C	20A-IW-ST1-C-9703
W14-P-4126 A1	M15W14-PR-A20-000107	PG-W8176A1	20A-IW-ST1-C-9749
W14-P-4126 A2	M15W14-PR-A20-000107	PG-W8176A2	20A-IW-ST1-C-9750
W14-P-4130 A1	M15W14-PR-A20-000108	PG-W8180A1	20A-IW-ST1-C-9751
W14-P-4130 A2	M15W14-PR-A20-000108	PG-W8180A2	20A-IW-ST1-C-9752
W14-P-4126 B1	M15W14-PR-A20-000109	PG-W8176B1	20A-IW-ST1-C-9753
W14-P-4126 B2	M15W14-PR-A20-000109	PG-W8176B2	20A-IW-ST1-C-9754
W14-P-4130 B1	M15W14-PR-A20-000110	PG-W8180B1	20A-IW-ST1-C-9755
W14-P-4130 B2	M15W14-PR-A20-000110	PG-W8180B2	20A-IW-ST1-C-9756
W14-P-4221 A	M15W14-PR-A20-000111	PG-W8271A	20A-IW-ST1-C-9705
W14-P-4221 B	M15W14-PR-A20-000111	PG-W8271B	20A-IW-ST1-C-9706
W14-P-4221 C	M15W14-PR-A20-000111	PG-W8271C	20A-IW-ST1-C-9707
W14-P-4225 A1	M15W14-PR-A20-000112	PG-W8276A1	20A-IW-ST1-C-9801
W14-P-4225 A2	M15W14-PR-A20-000112	PG-W8276A2	20A-IW-ST1-C-9802
W14-P-4230 A1	M15W14-PR-A20-000113	PG-W8280A1	20A-IW-ST1-C-9710
W14-P-4230 A2	M15W14-PR-A20-000113	PG-W8280A2	20A-IW-ST1-C-9711
W14-P-4225 B1	M15W14-PR-A20-000114	PG-W8276B1	20A-IW-ST1-C-9803
W14-P-4225 B2	M15W14-PR-A20-000114	PG-W8276B2	20A-IW-ST1-C-9804

ITEM NO.	P&ID NO.	PG	EXTERNAL SEAL FLUID LINE NO.
W14-P-4230 B1	M15W14-PR-A20-000115	PG-W8280B1	20A-IW-ST1-C-9714
W14-P-4230 B2	M15W14-PR-A20-000115	PG-W8280B2	20A-IW-ST1-C-9715
W14-P-4191 A	M15W14-PR-A20-000119	PG-W8241A	20A-IW-ST1-C-9716
W14-P-4191 B	M15W14-PR-A20-000119	PG-W8241B	20A-IW-ST1-C-9717
W14-P-4191 C	M15W14-PR-A20-000119	PG-W8241C	20A-IW-ST1-C-9718
W14-P-4195 A1	M15W14-PR-A20-000120	PG-W8245A1	20A-IW-ST1-C-9719
W14-P-4195 A2	M15W14-PR-A20-000120	PG-W8245A2	20A-IW-ST1-C-9720
W14-P-4195 B1	M15W14-PR-A20-000121	PG-W8245B1	20A-IW-ST1-C-9721
W14-P-4195 B2	M15W14-PR-A20-000121	PG-W8245B2	20A-IW-ST1-C-9722
W14-P-4801 A	M15W14-PR-A20-000134	PG-W8551A	20A-IW-ST1-C-9727
W14-P-4801 B	M15W14-PR-A20-000134	PG-W8551B	20A-IW-ST1-C-9728
W14-P-4907 A	M15W14-PR-A20-000163	PG-W8957A	20A-IW-ST1-C-9729
W14-P-4907 B	M15W14-PR-A20-000163	PG-W8957B	20A-IW-ST1-C-9730
W14-P-4715 A	M15W14-PR-A20-000501	PG-W8715A	20A-IW-ST1-C-7008
W14-P-4715 B	M15W14-PR-A20-000501	PG-W8715B	20A-IW-ST1-C-7009
W14-P-4715 C	M15W14-PR-A20-000501	PG-W8715C	20A-IW-ST1-C-7010
W14-P-4725 A	M15W14-PR-A20-000502	PG-W8725A	20A-IW-ST1-C-7011
W14-P-4725 B	M15W14-PR-A20-000502	PG-W8725B	20A-IW-ST1-C-7012
W14-P-4729 A	M15W14-PR-A20-000503	PG-W8729A	20A-IW-ST1-C-7013
W14-P-4729 B	M15W14-PR-A20-000503	PG-W8729B	20A-IW-ST1-C-7014
W14-P-4730 A	M15W14-PR-A20-000504	PG-W8730A	20A-IW-ST1-C-7015
W14-P-4730 B	M15W14-PR-A20-000504	PG-W8730B	20A-IW-ST1-C-7016
W14-P-4735 A	M15W14-PR-A20-000505	PG-W8735A	20A-IW-ST1-C-7017
W14-P-4735 B	M15W14-PR-A20-000505	PG-W8735B	20A-IW-ST1-C-7018
W14-P-4738 A	M15W14-PR-A20-000506	PG-W8738A	20A-IW-ST1-C-7019
W14-P-4738 B	M15W14-PR-A20-000506	PG-W8738B	20A-IW-ST1-C-7020
W14-P-4731 A1/A2	M15W14-PR-A20-000113		
W14-P-4731 B1/B2	M15W14-PR-A20-000115		
W14-P-4232 A/B	M15W14-PR-A20-000116		
W14-P-4739 A/B	M15W14-PR-A20-000506		
W14-P-4740 A/B	M15W14-PR-A20-000507		

2A

SEAL PLAN 32
FOR EACH SEAL FLUSHING SYSTEM

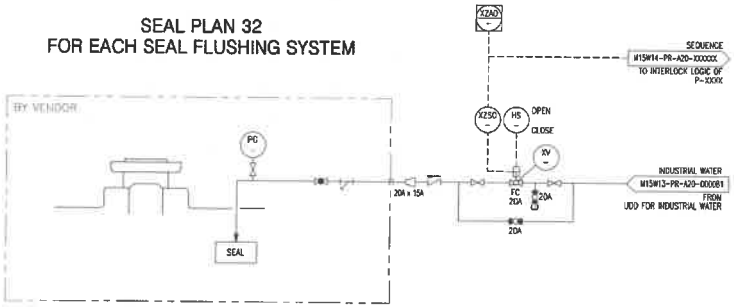

ITEM NO.	P&ID NO.	PG	XV	HS	XZSO	XZAO	EXTERNAL SEAL FLUID LINE NO.
W14-P-4805 A1	M15W14-PR-A20-000135	PG-W8855A1	XV-W4855A1	HS-W4855A1	XZSO-W4855A1	XZAO-W4855A1	20A-IW-ST1-C-9737
W14-P-4805 A2	M15W14-PR-A20-000135	PG-W8855A2	XV-W4855A2	HS-W4855A2	XZSO-W4855A2	XZAO-W4855A2	20A-IW-ST1-C-9738
W14-P-4805 B1	M15W14-PR-A20-000136	PG-W8855B1	XV-W4855B1	HS-W4855B1	XZSO-W4855B1	XZAO-W4855B1	20A-IW-ST1-C-9739
W14-P-4805 B2	M15W14-PR-A20-000136	PG-W8855B2	XV-W4855B2	HS-W4855B2	XZSO-W4855B2	XZAO-W4855B2	20A-IW-ST1-C-9740

대외비

NOTE

REV.	DESCRIPTION	DATE
2A	REVISED AFC	25.08.14
2	REVISED AFC	25.01.17
1	REVISED AFC	24.10.31

제 도 DRAWN BY: 이 민 학
검 토 CHECKED BY: 한 진 희
승 인 APPROVED BY: 박 동 영
제 작 사: SK 에코플랜트
공 사 명 PROJECT TITLE: M15X Ph4 WWT Project
도면명 DWG. TITLE: PIPING & INSTRUMENT DIAGRAM PUMP SEAL & PIPING PLAN (1/2)
축 척 SCALE: NONE
날 짜 DATE: 2025. 08. 14
PROJECT NO.: 223300 REV.: 2A
도면번호 SHEET NO.: CJ-M15W14-PR-A00-000011

C:₩Users₩TOP₩Desktop₩P&ID251013₩[M15X-Ph-4 for 인허가]CAD FILE_0910₩CJ-M15W14-PR-A00-000011 R2 P&ID FOR PUMP

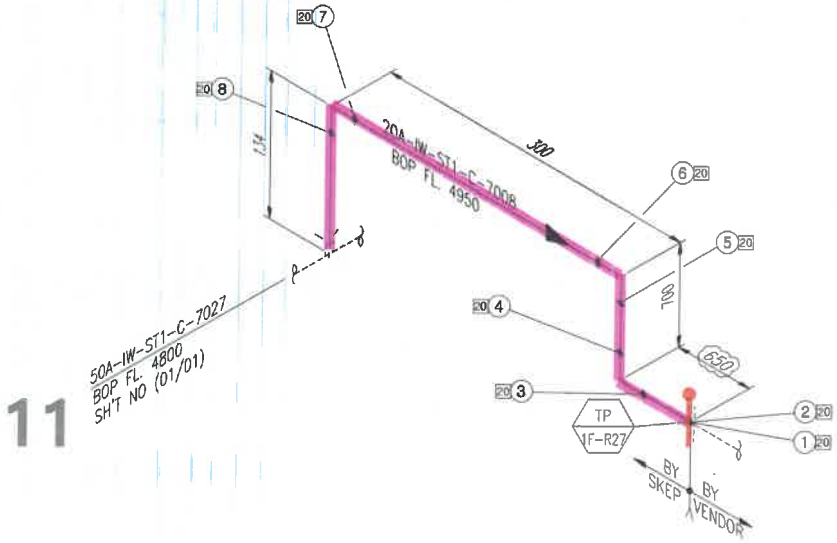

SK ecoplant

ITEM	SIZE	Q'TY	DESCRIPTION
		ST1	
P	20A	1.8M	PIPE, STS 304TP, ERW, PE - SCH 10S
E90	20A	3EA	ELBOW 90 DEG, STSF304, SW - SCH 10S
F	20A	1EA	FLG SO, KS 10K, RF, STS304
IN	25(X20A	1.8M	관 보온재(고무발포)

<NOTE>
1. (*) FIELD ADJUST

* PIPE : P/P1 * 90° ELBOW : E90 * 45° ELBOW : E45 * TEE : T * RED.TEE : TR * STUB-IN : STU * REINFORCING PAD : RP * CON.RED : RC * ECC.RED : RE * CON.SWAGE : RCS/RCS1 * ECC.SWAGE : RES/RES1 * NIPPLE : NP/NP1/NP2 * CAP : CAP/CAP1 * PLUG : PLG * FULL COUPLING : FC * HALF COUPLING : HF/HF1
* STUB-IN : STU * SOCKET(HDPE/PVC) : SC * SADDLE(HDPE) : SD * FLANGE : F/F1 * GASKET : G/G1/G2 * BOLT & NUT : B/B1 * BLIND FLANGE : FB/FB1 * GATE VA. : VG/VG1/VG2 * BALL VA. : VB/VBLO/VB1/VB1LO/VB2/VB2LO * BUTTERFLY VA. : VF/VF4 * CHECK VA. : VC/VC1/VC2/VC3/VC4/VC5/VC6/VC7
* GLOBE VA. : VL/VL1/VL2 * DIAPHRAGM VA. : VD/VDLO * DAMPER : VP * QUICK COUPLING : SQC * FLEXIBLE JOINT(STEEL) : FLXB * FLEXIBLE JOINT(RUBBER) : FLXR * FLEXIBLE JOINT(STEEL PTFE LINED) : FLXL * FLEXIBLE HOSE : FLXH * STEAM TRAP : ST * SPRAY NOZZLE : SPN * EMERGENCY SHOWER : SSH
* STRAINER(Y-TYPE) : YSTR * STRAINER(T-TYPE) : TSTR * STRAINER(BUCKET-TYPE) : BSTR * ANCHOR PLATE : STOP * BIRD SCREEN : BS * ISOLATION KIT : IK * UNLOADING BOX : UB * AIR TRAP : AT * LOTO : LOTO * SIGHT GLASS : SG * PRESSURE GAUGE : PG * SHIELD : SH * SPECIAL BOLT & NUT : BL/BL1

CLIENT SK hynix 1

INSULATION	CODE	C	CONDITION	PRESS. (kg/cm2g)	TEMP. (°C)
	THICK.	25	DESIGN	13.5	60
			OPERATING	10	AMB

AREA W14
UNIT R1FA
REF. PLAN DWG. CJ-M15W14-PI-A30-010017-B
REF. P & ID CJ-M15W13-PR-A20-000081

REV. NO.	DATE	DESCRIPTION	BY	CHK	APP'D
1	25.03.31	REVISED AS MARKED	황래종	안남후	박동영
0	25.01.24	APPROVED FOR CONSTRUCTION	황래종	안남후	박동영

CONTRACTOR SK ecoplant
COMMODITY IW
LINE NO. 20A-IW-ST1-C-7008
PROJECT NAME M15X Ph4 Project
JOB NO. 22330D
SH'T NO. 01 / 01 REV. 1

경고 : 본 도면은 SK HYNIX의 기업비밀 자료로서, 어떠한 경우에도 목적 외 사용, 복제, 제3자에게 공개, 누설 및 유출할 수 없으며, 회사는 유포자의 불법 사용으로 피해가 발생할 경우 유포자에게 민/형사상 책임을 요구할 수 있음.

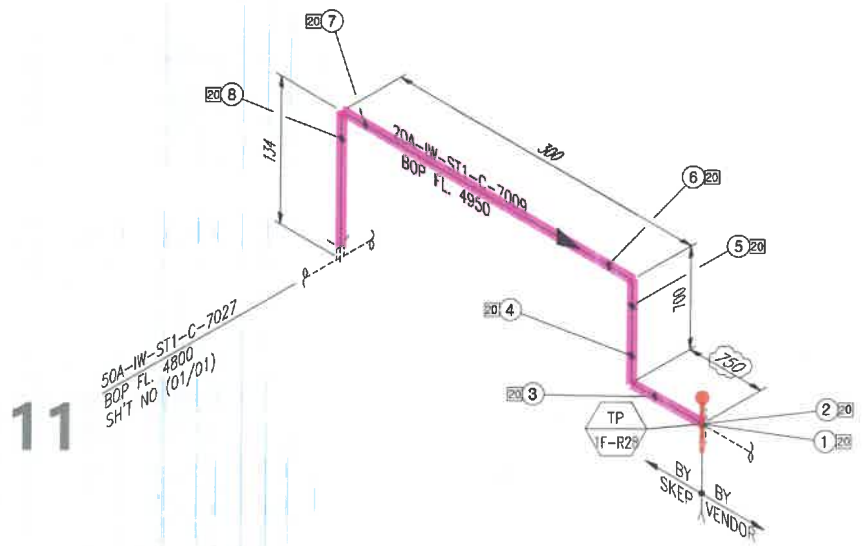

SK ecoplant

ITEM	SIZE	Q'TY	DESCRIPTION
		ST1	
P	20A	1.9M	PIPE, STS 304TP, ERW, PE - SCH 10S
E90	20A	3EA	ELBOW 90 DEG, STSF304, SW - SCH 10S
F	20A	1EA	FLG SO, KS 10K, RF, STS304
IN	25(X20A	1.9M	큰 보온재(2부밸브)

<NOTE>
1. (*) FIELD ADJUST

* PIPE : P/P1 * 90° ELBOW : E90 * 45° ELBOW : E45 * TEE : T * RED.TEE : TR * STUB-IN : STU * REINFORCING PAD : RP * CON.RED : RC * ECC.RED : RE * CON.SWAGE : RCS/RCS1 * ECC.SWAGE : RCS/RES1 * NIPPLE : NP/NP1/NP2 * CAP : CAP/CAP1 * PLUG : PLG * FULL COUPLING : FC * HALF COUPLING : HF/HF1
* STUB-IN : STU * SOCKET(HDPE/PVC) : SC * SADDLE(HDPE) : SD * FLANGE : F/F1 * GASKET : G/G1/G2 * BOLT & NUT : B/B1 * BLIND FLANGE : FB/FB1 * GATE VA. : VG/VG1/VG2 * BALL VA. : VB/VBL0/VB1/VB1L0/VB2/VB2L0 * BUTTERFLY VA. : VF/VF4 * CHECK VA. : VC/VC1/VC2/VC3/VC4/VC5/VC6/VC7
* GLOBE VA. : VL/VL1/VL2 * DIAPHRAGM VA. : VD/VDL0 * DAMPER : VP * QUICK COUPLING : SQC * FLEXIBLE JOINT(STEEL) : FLXB * FLEXIBLE JOINT(RUBBER) : FLXR * FLEXIBLE JOINT(STEEL PTFE LINED) : FLXL * FLEXIBLE HOSE : FLXH * STEAM TRAP : ST * SPRAY NOZZLE : SPN * EMERGENCY SHOWER : SSH
* STRAINER(Y-TYPE) : YSTR * STRAINER(T-TYPE) : TSTR * STRAINER(BUCKET-TYPE) : BSTR * ANCHOR PLATE : STOP * BIRD SCREEN : BS * ISOLATION KIT : IK * UNLOADING BOX : UB * AIR TRAP : AT * LOTO : LOTO * SIGHT GLASS : SG * PRESSURE GAUGE : PG * SHILED : SH * SPECIAL BOLT & NUT : BL/BL1

CLIENT SK hynix 2

INSULATION	CODE	C
	THICK.	25

CONDITION	PRESS. (kg/cm2g)	TEMP. (°C)
DESIGN	13.5	60
OPERATING	10	AMB

AREA W14
UNIT R1FA
REF. PLAN DWG. CJ-M15W14-PI-A30-010017-B
REF. P & ID CJ-M15W13-PR-A20-000081

REV. NO.	DATE	DESCRIPTION	BY	CHK	APP'D
1	25.03.31	REVISED AS MARKED	황래종	안남후	박동영
0	25.01.24	APPROVED FOR CONSTRUCTION	황래종	안남후	박동영

CONTRACTOR SK ecoplant
COMMODITY IW
LINE NO. 20A-IW-ST1-C-7009
PROJECT NAME M15X Ph4 Project
JOB NO. 22330D
SH'T NO. 01 / 01
REV. 1

경고 : 본 도면은 SK HYNIX의 기업비밀 자료로서, 어떠한 경우에도 목적 외 사용, 복제, 제3자에게 공개, 누설 및 유출할 수 없으며, 회사는 유포자의 불법 사용으로 피해가 발생할 경우 유포자에게 민/형사상 책임을 요구할 수 있음.

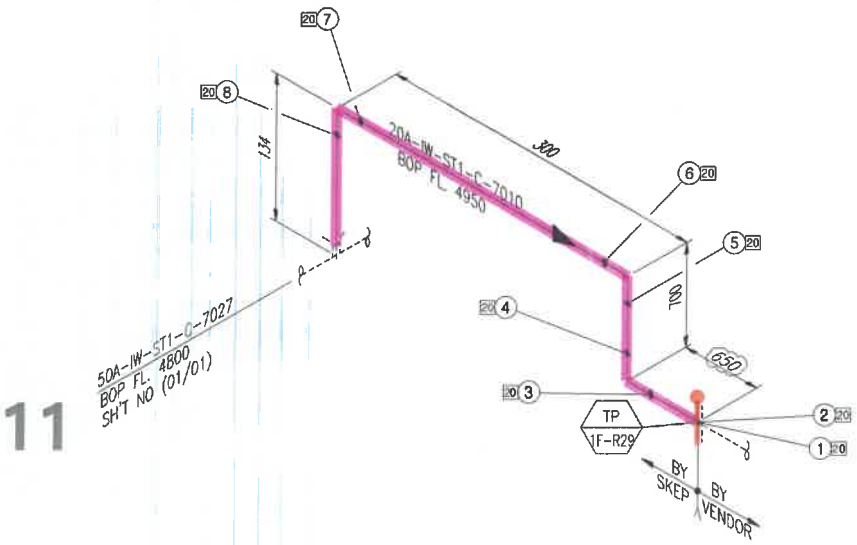

SK ecoplant

ITEM	SIZE	Q'TY	DESCRIPTION
		ST1	
P	20A	1.8M	PIPE, STS 304TP, ERW, PE - SCH 10S
E90	20A	3EA	ELBOW 90 DEG, STSF304, SW - SCH 10S
F	20A	1EA	FLG SO, KS 10K, RF, STS304
IN	25tX20A	1.8M	곤 보온재(고무발포)

<NOTE>
1. (*) FIELD ADJUST

* PIPE : P/P1 * 90° ELBOW : E90 * 45° ELBOW : E45 * TEE : T * RED.TEE : TR * STUB-IN : STU * REINFORCING PAD : RP * CON.RED : RC * ECC.RED : RE * CON.SWAGE : RCS/RCS1 * ECC.SWAGE : RES/RES1 * NIPPLE : NP/NP1/NP2 * CAP : CAP/CAP1 * PLUG : PLG * FULL COUPLING : FC * HALF COUPLING : HF/HF1
* STUB-IN : STU * SOCKET(HDPE/PVC) : SC * SADDLE(HDPE) : SD * FLANGE : F/F1 * GASKET : G/G1/G2 * BOLT & NUT : B/B1 * BLIND FLANGE : FB/FB1 * GATE VA. : VG/VG1/VG2 * BALL VA. : VB/VB1LO/VB1/VB1LO/VB2/VB2LO * BUTTERFLY VA. : VF/VF4 * CHECK VA. : VC/VC1/VC2/VC3/VC4/VC5/VC6/VC7
* GLOBE VA. : VL/VL1/VL2 * DIAPHRAGM VA. : VD/VDLO * DAMPER : VP * QUICK COUPLING : SQC * FLEXIBLE JOINT(STEEL) : FLXS * FLEXIBLE JOINT(RUBBER) : FLXR * FLEXIBLE JOINT(STEEL PTFE LINED) : FLXL * FLEXIBLE HOSE : FLXH * STEAM TRAP : ST * SPRAY NOZZLE : SPN * EMERGENCY SHOWER : SSH
* STRAINER(Y-TYPE) : YSTR * STRAINER(T-TYPE) : TSTR * STRAINER(BUCKET-TYPE) : BSTR * ANCHOR PLATE : STOP * BIRD SCREEN : BS * ISOLATION KIT : IK * UNLOADING BOX : UB * AIR TRAP : AT * LOTO : LOTO * SIGHT GLASS : SG * PRESSURE GAUGE : PG * SHIELD : SH * SPECIAL BOLT & NUT : BL/NL1

CLIENT SK hynix 3

INSULATION	CODE	C	CONDITION	PRESS. (kg/cm2g)	TEMP. (°C)
	THICK.	25	DESIGN	13.5	60
			OPERATING	10	AMB

AREA W14
UNIT R1FA
REF. PLAN DWG. CJ-M15W14-PI-A30-010017-B
REF. P & ID CJ-M15W13-PR-A20-000081

REV. NO.	DATE	DESCRIPTION	BY	CHK	APP'D
1	25.03.31	REVISED AS MARKED	황래종	안남후	박동영
0	25.01.24	APPROVED FOR CONSTRUCTION	황래종	안남후	박동영

CONTRACTOR SK ecoplant
PROJECT NAME M15X Ph4 Project
COMMODITY IW
JOB NO. 22330D
LINE NO. 20A-IW-ST1-C-7010
SH'T NO. 01 / 01
REV. 1

경고 : 본 도면은 SK HYNIX의 기업비밀 자료로서, 어떠한 경우에도 목적 외 사용, 복제, 제3자에게 공개, 누설 및 유출할 수 없으며, 회사는 유포자의 불법 사용으로 피해가 발생할 경우 유포자에게 민/형사상 책임을 요구할 수 있음.

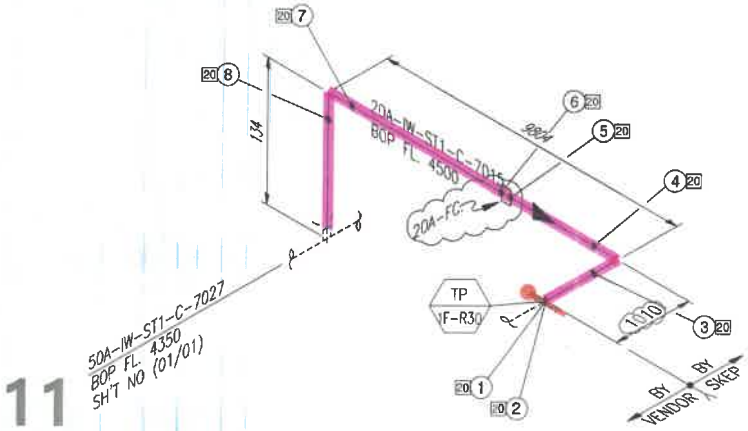

SK ecoplant

ITEM	SIZE	Q'TY	DESCRIPTION
		ST1	
P	20A	10.9M	PIPE, STS 304TP, ERW, PE - SCH 10S
E90	20A	2EA	ELBOW 90 DEG, STSF304, SW - SCH 10S
F	20A	1EA	FLG SO, KS 10K, RF, STS304
IN	25tX20A	10.9M	건 보온재(고무발포)
FC	20A	1EA	COUPLING FULL, STSF304, SW - SCH 10S

<NOTE>
1. (*) FIELD ADJUST

* PIPE : P/P1 * 90° ELBOW : E90 * 45° ELBOW : E45 * TEE : T * RED.TEE : TR * STUB-IN : STU * REINFORCING PAD : RP * CON.RED : RC * ECC.RED : RE * CON.SWAGE : RCS/RCS1 * ECC.SWAGE : RES/RES1 * NIPPLE : NP/NP1/NP2 * CAP : CAP/CAP1 * PLUG : PLG * FULL COUPLING : FC * HALF COUPLING : HF/HF1
* STUB-IN : STU * SOCKET(HDPE/PVC) : SC * SADDLE(HDPE) : SD * FLANGE : F/F1 * GASKET : G/G1/G2 * BOLT & NUT : B/B1 * BLIND FLANGE : FB/FB1 * GATE VA. : VG/VG1/VG2 * BALL VA. : VB/VB1.0/VB1/VB1.0/VB2/VB2.0 * BUTTERFLY VA. : VF/VF4 * CHECK VA. : VC/VC1/VC2/VC3/VC4/VC5/VC6/VC7
* GLOBE VA. : VL/VL1/VL2 * DIAPHRAGM VA. : VD/VD1.0 * DAMPER : VP * QUICK COUPLING : SQC * FLEXIBLE JOINT(STEEL) : FLXB * FLEXIBLE JOINT(RUBBER) : FLXR * FLEXIBLE JOINT(STEEL_PTFE LINED) : FLXL * FLEXIBLE HOSE : FLXH * STEAM TRAP : ST * SPRAY NOZZLE : SPN * EMERGENCY SHOWER : SSH
* STRAINER(Y-TYPE) : YSTR * STRAINER(T-TYPE) : TSTR * STRAINER(BUCKET-TYPE) : BSTR * ANCHOR PLATE : STOP * BIRD SCREEN : BS * ISOLATION KIT : IK * UNLOADING BOX : UB * AIR TRAP : AT * LOTO : LOTO * SIGHT GLASS : SG * PRESSURE GAUGE : PG * SHIELD : SH * SPECIAL BOLT & NUT : BL/BL1

CLIENT SK hynix 4

INSULATION	CODE	C	CONDITION	PRESS. (kg/cm2g)	TEMP. (°C)
	THICK.	25	DESIGN	13.5	60
			OPERATING	10	AMB

AREA W14
UNIT R1FA
REF. PLAN DWG. CJ-M15W14-PI-A30-010017-B
REF. P & ID CJ-M15W13-PR-A20-000081

REV. NO.	DATE	DESCRIPTION	BY	CHK	APP'D
1	25.03.31	REVISED AS MARKED	황래종	안남후	박동영
0	25.01.24	APPROVED FOR CONSTRUCTION	황래종	안남후	박동영

CONTRACTOR SK ecoplant
PROJECT NAME M15X Ph4 Project
COMMODITY IW
JOB NO. 22330D
LINE NO. 20A-IW-ST1-C-7015
SH'T NO. 01 / 01
REV. 1

경고 : 본 도면은 SK HYNIX의 기업비밀 자료로서, 어떠한 경우에도 목적 외 사용, 복제, 제3자에게 공개, 누설 및 유출할 수 없으며, 회사는 유포자의 불법 사용으로 피해가 발생할 경우 유포자에게 민/형사상 책임을 요구할 수 있음.

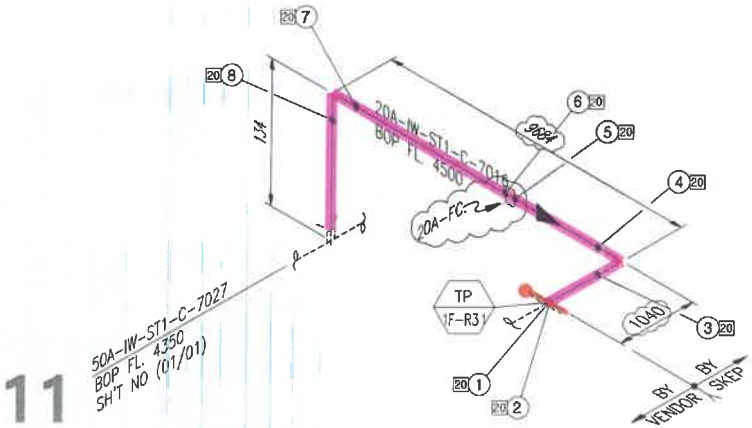

11

ITEM	SIZE	Q'TY	DESCRIPTION
		ST1	
P	20A	10.6M	PIPE, STS 304TP, ERW, PE - SCH 10S
E90	20A	2EA	ELBOW 90 DEG, STSF304, SW - SCH 10S
F	20A	1EA	FLG SO, KS 10K, RF, STS304
IN	25tX20A	10.6M	관 보온재(고무발포)
FC	20A	1EA	COUPLING FULL, STSF304, SW - SCH 10S

<NOTE>
1. (*) FIELD ADJUST

* PIPE : P/P1 * 90° ELBOW : E90 * 45° ELBOW : E45 * TEE : T * RED.TEE : TR * STUB-IN : STU * REINFORCING PAD : RP * CON.RED : RC * ECC.RED : RE * CON.SWAGE : RCS/RCS1 * ECC.SWAGE : RES/RES1 * NIPPLE : NP/NP1/NP2 * CAP : CAP/CAP1 * PLUG : PLG * FULL COUPLING : FC * HALF COUPLING : HF/HF1
* STUB-IN : STU * SOCKET(HDPE/PVC) : SC * SADDLE(HDPE) : SD * FLANGE : F/F1 * GASKET : G/G1/G2 * BOLT & NUT : B/B1 * BLIND FLANGE : FB/FB1 * GATE VA : VG/VG1/VG2 * BALL VA : VB/VBLO/VB1/VB1LO/VB2/VB2LO * BUTTERFLY VA : VF/VF4 * CHECK VA : VC/VC1/VC2/VC3/VC4/VC5/VC6/VC7
* GLOBE VA : VL/VL1/VL2 * DIAPHRAGM VA : VD/VDLO * DAMPER : VP * QUICK COUPLING : SQC * FLEXIBLE JOINT(STEEL) : FLXB * FLEXIBLE JOINT(RUBBER) : FLXR * FLEXIBLE JOINT(STEEL_PTFE LINED) : FLXL * FLEXIBLE HOSE : FLXH * STEAM TRAP : ST * SPRAY NOZZLE : SPN * EMERGENCY SHOWER : SSH
* STRAINER(Y-TYPE) : YSTR * STRAINER(I-TYPE) : TSTR * STRAINER(BUCKET-TYPE) : BSTR * ANCHOR PLATE : STOP * BIRD SCREEN : BS * ISOLATION KIT : IK * UNLOADING BOX : UB * AIR TRAP : AT * LOTO : LOTO * SIGHT GLASS : SG * PRESSURE GAUGE : PG * SHIELD : SH * SPECIAL BOLT & NUT : BL/BL1

INSULATION	CODE	C	CONDITION	PRESS. (kg/cm2g)	TEMP. (°C)
	THICK.	25	DESIGN	13.5	60
			OPERATING	10	AMB

AREA W14
UNIT R1FA
REF. PLAN DWG. CJ-M15W14-PI-A30-010017-B
REF. P & ID CJ-M15W13-PR-A20-000081

REV. NO	DATE	DESCRIPTION	BY	CHK	APP'D
1	25.03.31	REVISED AS MARKED	황래종	안남후	박동영
0	25.01.24	APPROVED FOR CONSTRUCTION	황래종	안남후	박동영

CLIENT SK hynix 5
CONTRACTOR SK ecoplant
PROJECT NAME M15X Ph4 Project
COMMODITY IW
JOB NO. 22330D
LINE NO. 20A-IW-ST1-C-7016
SH'T NO. 01 / 01
REV. 1

경고 : 본 도면은 SK HYNIX의 기업비밀 자료로서, 어떠한 경우에도 목적 외 사용, 복제, 제3자에게 공개, 누설 및 유출할 수 없으며, 회사는 유포자의 불법 사용으로 피해가 발생할 경우 유포자에게 민/형사상 책임을 요구할 수 있음.

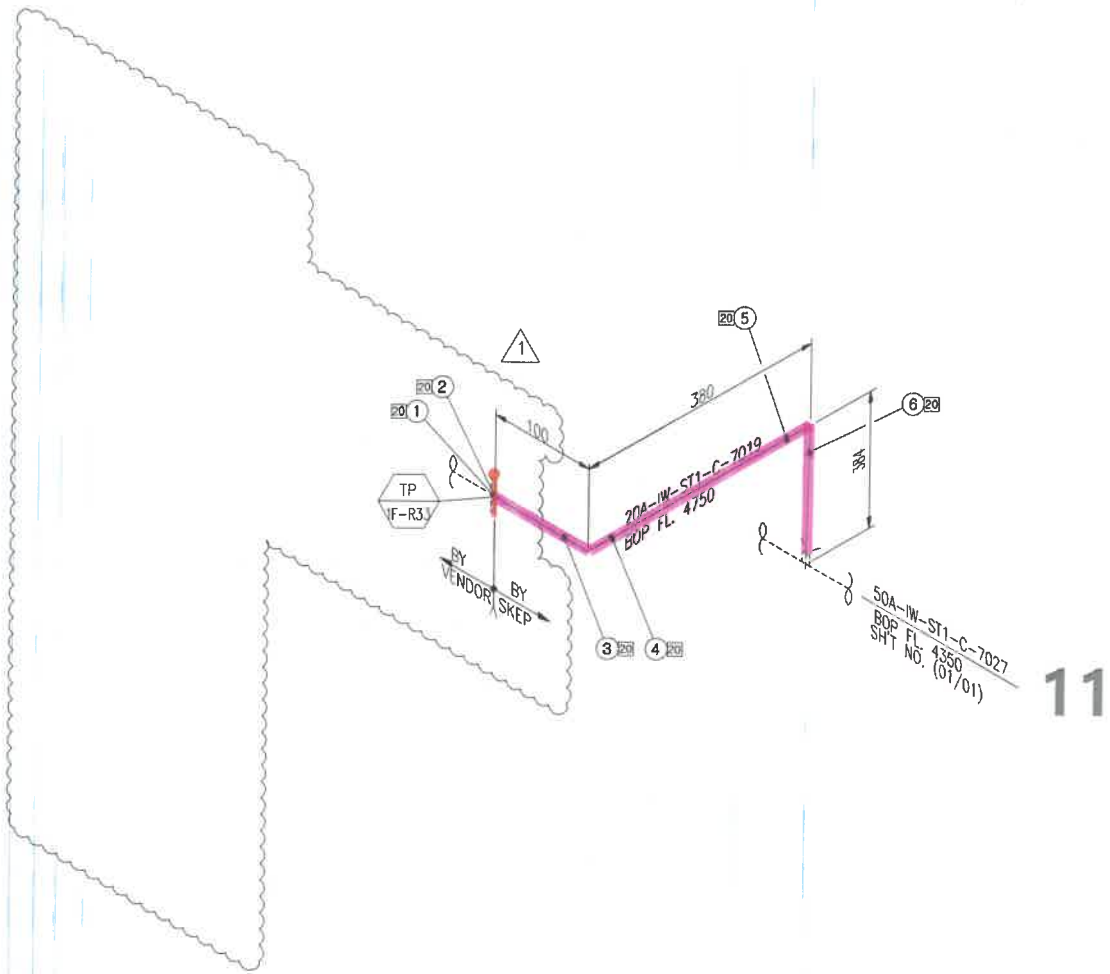

<NOTE>
1. (*) FIELD ADJUST

ITEM	SIZE	Q'TY	DESCRIPTION
		ST1	
P	20A	1.6M	PIPE, STS 304TP, ERW, PE - SCH 10S
E90	20A	2EA	ELBOW 90 DEG, STSF304, SW - SCH 10S
F	20A	1EA	FLG SO, KS 10K, RF, STS304
IN	25tX20A	1.6M	곤 보온재(고무발포)

* PIPE : P/P1 * 90° ELBOW : E90 * 45° ELBOW : E45 * TEE : T * RED.TEE : TR * STUB-IN : STU * REINFORCING PAD : RP * CON.RED : RC * ECC.RED : RE * CON.SWAGE : RCS/RCS1 * ECC.SWAGE : RES/RES1 * NIPPLE : NP/NP1/NP2 * CAP : CAP/CAP1 * PLUG : PLG * FULL COUPLING : FC * HALF COUPLING : HF/HF1
* STUB-IN : STU * SOCKET(HDPE/PVC) : SC * SADDLE(HDPE) : SD * FLANGE : F/F1 * GASKET : G/G1/G2 * BOLT & NUT : B/B1 * BLIND FLANGE : FB/FB1 * GATE VA. : VG/VG1/VG2 * BALL VA. : VB/VBLO/VB1/VB1LO/VB2/VB2LO * BUTTERFLY VA. : VF/VF4 * CHECK VA. : VC/VC1/VC2/VC3/VC4/VC5/VC6/VC7
* GLOBE VA. : VL/VL1/VL2 * DIAPHRAGM VA. : VD/VDLO * DAMPER : VP * QUICK COUPLING : SQC * FLEXIBLE JOINT(STEEL) : FLXB * FLEXIBLE JOINT(RUBBER) : FLXR * FLEXIBLE JOINT(STEEL PTFE LINED) : FLXL * FLEXIBLE HOSE : FLXH * STEAM TRAP : ST * SPRAY NOZZLE : SPN * EMERGENCY SHOWER : SSH
* STRAINER(Y-TYPE) : YSTR * STRAINER(T-TYPE) : TSTR * STRAINER(BUCKET-TYPE) : BSTR * ANCHOR PLATE : STOP * BIRD SCREEN : BS * ISOLATION KIT : IK * UNLOADING BOX : UB * AIR TRAP : AT * LOTO : LOTO * SIGHT GLASS : SG * PRESSURE GAUGE : PG * SHILED : SH * SPECIAL BOLT & NUT : BL/BL1

CLIENT SK hynix 6

INSULATION	CODE	C	CONDITION	PRESS. (kg/cm2g)	TEMP. (°C)
	THICK.	25	DESIGN	13.5	60
			OPERATING	10	AMB

AREA W14
UNIT R1FA
REF. PLAN DWG. CJ-M15W14-PI-A30-010017-B
REF. P & ID CJ-M15W13-PR-A20-000081

REV. NO.	DATE	DESCRIPTION	BY	CHK	APP'D
1	25.03.31	REVISED AS MARKED	황래종	안남후	박동영
0	25.01.24	APPROVED FOR CONSTRUCTION	황래종	안남후	박동영

CONTRACTOR SK ecoplant
COMMODITY IW
LINE NO. 20A-IW-ST1-C-7019
PROJECT NAME M15X Ph4 Project
JOB NO. 22330D
SH'T NO. 01 / 01
REV. 1

경고 : 본 도면은 SK HYNIX의 기업비밀 자료로서, 어떠한 경우에도 목적 외 사용, 복제, 제3자에게 공개, 누설 및 유출할 수 없으며, 회사는 유포자의 불법 사용으로 피해가 발생할 경우 유포자에게 민/형사상 책임을 요구할 수 있음.

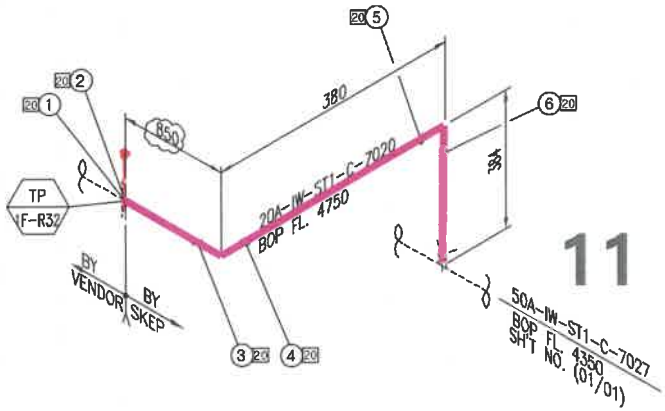

<NOTE>
1. (*) FIELD ADJUST

SK ecoplant

ITEM	SIZE	Q'TY	DESCRIPTION
		ST1	
P	20A	1.6M	PIPE, STS 304TP, ERW, PE – SCH 10S
E90	20A	2EA	ELBOW 90 DEG, STSF304, SW – SCH 10S
F	20A	1EA	FLG SO, KS 10K, RF, STS304
IN	25tX20A	1.6M	권 보온재(고무발포)

* PIPE : P/P1 * 90° ELBOW : E90 * 45° ELBOW : E45 * TEE : T * RED.TEE : TR * STUB-IN : STU * REINFORCING PAD : RP * CON.RED : RC * ECC.RED : RE * CON.SWAGE : RCS/RCS1 * ECC.SWAGE : RES/RES1 * NIPPLE : NP/NP1/NP2 * CAP : CAP/CAP1 * PLUG : PLG * FULL COUPLING : FC * HALF COUPLING : HF/HF1
* STUB-IN : STU * SOCKET(HDPE/PVC) : SC * SADDLE(HDPE) : SD * FLANGE : F/F1 * GASKET : G/G1/G2 * BOLT & NUT : B/B1 * BLIND FLANGE : FB/FB1 * GATE VA. : VG/VG1/VG2 * BALL VA. : VB/VBLO/VB1/VB1LO/VB2/VB2LO * BUTTERFLY VA. : VF/VF4 * CHECK VA. : VC/VC1/VC2/VC3/VC4/VC5/VC6/VC7
* GLOBE VA. : VL/VL1/VL2 * DIAPHRAGM VA. : VD/VDLO * DAMPER : VP * QUICK COUPLING : SQC * FLEXIBLE JOINT(STEEL) : FLXB * FLEXIBLE JOINT(RUBBER) : FLXR * FLEXIBLE JOINT(STEEL, PTFE LINED) : FLXL * FLEXIBLE HOSE : FLXH * STEAM TRAP : ST * SPRAY NOZZLE : SPN * EMERGENCY SHOWER : SSH
* STRAINER(Y-TYPE) : YSTR * STRAINER(T-TYPE) : TSTR * STRAINER(BUCKET-TYPE) : BSTR * ANCHOR PLATE : STOP * BIRD SCREEN : BS * ISOLATION KIT : IK * UNLOADING BOX : UB * AIR TRAP : AT * LOTO : LOTO * SIGHT GLASS : SG * PRESSURE GAUGE : PG * SHIELD : SH * SPECIAL BOLT & NUT : BL/BL1

CLIENT SK hynix 7

INSULATION	CODE	C	CONDITION	PRESS. (kg/cm2g)	TEMP. (°C)
	THICK.	25	DESIGN	13.5	60
			OPERATING	10	AMB

AREA W14
UNIT R1FA
REF. PLAN DWG. CJ-M15W14-PI-A30-010016-B
REF. P & ID CJ-M15W13-PR-A20-000081

REV. NO.	DATE	DESCRIPTION	BY	CHK	APP'D
1	25.03.31	REVISED AS MARKED	황래종	안남후	박동영
0	25.01.24	APPROVED FOR CONSTRUCTION	황래종	안남후	박동영

CONTRACTOR SK ecoplant
PROJECT NAME M15X Ph4 Project
COMMODITY IW
JOB NO. 22330D
LINE NO. 20A-IW-ST1-C-7020
SH'T NO. 01 / 01
REV. 1

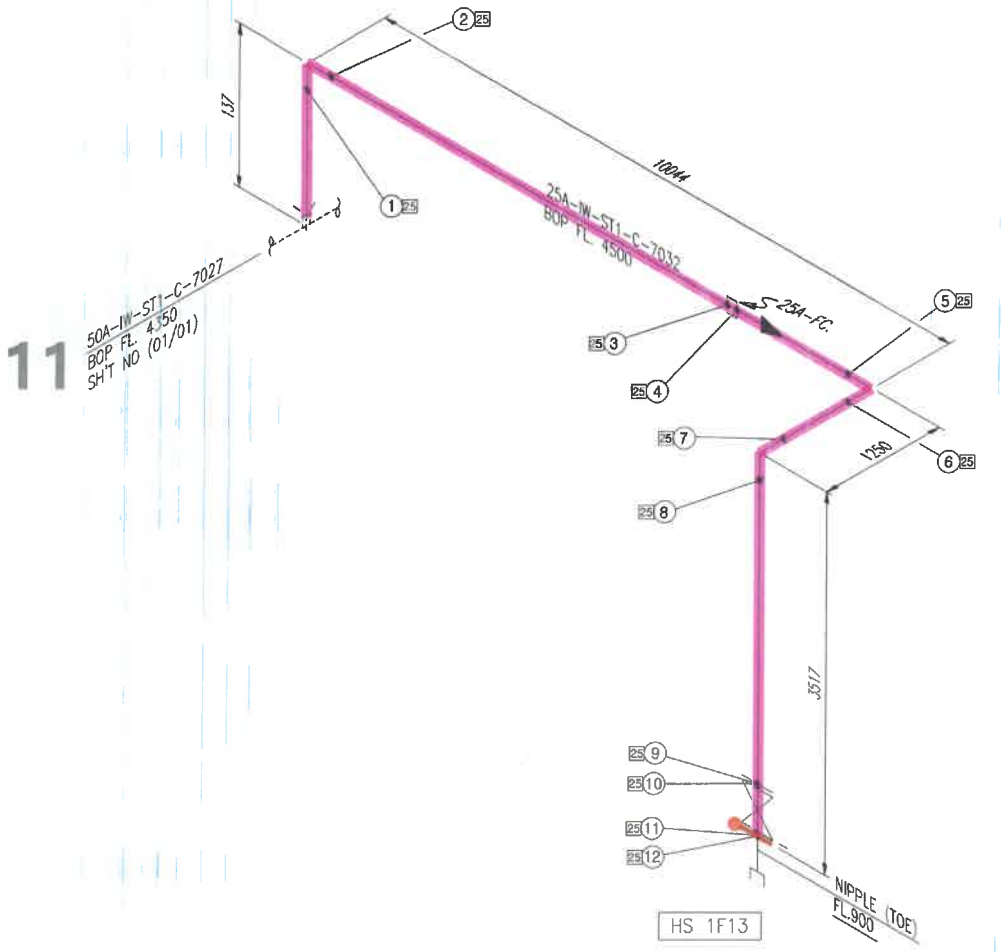

<NOTE>
1. (*) FIELD ADJUST

SK ecoplant

ITEM	SIZE	Q'TY	DESCRIPTION
		ST1	
P	25A	14.9M	PIPE, STS 304TP, ERW, PE - SCH 10S
NP1	25A	1EA	NIPPLE, STS 304TP, ERW, TOE - SCH 40S
E90	25A	3EA	ELBOW 90 DEG, STSF304, SW - SCH 10S
FC	25A	1EA	COUPLING FULL, STSF304, SW - SCH 10S
VG	25A	1EA	GATE VALVE, KS 10K, RF FLG'D, BODY-STSF304 /
			TRIM-STS304, BB / OS&Y, HANDWHEEL
F	25A	2EA	FLG SO, KS 10K, RF, STS304
G	25A	2EA	GASKET, KS 10K, RF, PTFE+EPDM, 3.0MM TH'K
B	25A	2SET	MACHINE BOLT & NUTS :STS 304 / W WASHERS
SQC	25A	1EA	QUICK COUPLING(MALE)
IN	25tX25A	14.9M	관 보온재(2무벨트)

* PIPE : P/P1 * 90° ELBOW : E90 * 45° ELBOW : E45 * TEE : T * RED.TEE : TR * STUB-IN : STU * REINFORCING PAD : RP * CONI.RED : RC * ECC.RED : RE * CON.SWAGE : RCS/RCS1 * ECC.SWAGE : RES/RES1 * NIPPLE : NP/NP1/NP2 * CAP : CAP/CAP1 * PLUG : PLG * FULL COUPLING : FC * HALF COUPLING : HF/HF1
* STUB-IN : STU * SOCKET(HDPE,PVC) : SC * SADDLE(HDPE) : SD * FLANGE : F/F1 * GASKET : G/G1/G2 * BOLT & NUT : B/B1 * BLIND FLANGE : FB/FB1 * GATE VA. : VG/VG1/VG2 * BALL VA. : VB/VB1.O/VB1/VB1.LO/VB2/VB2.LO * BUTTERFLY VA. : VF/VF4 * CHECK VA. : VC/VC1/VC2/VC3/VC4/VC5/VC6/VC7
* GLOBE VA. : VL/VL1/VL2 * DIAPHRAGM VA. : VD/VD.LO * DAMPER : VP * QUICK COUPLING : SQC * FLEXIBLE JOINT(STEEL) : FLXB * FLEXIBLE JOINT(RUBBER) : FLXR * FLEXIBLE JOINT(STEEL PTFE LINED) : FLXL * FLEXIBLE HOSE : FLXH * STEAM TRAP : ST * SPRAY NOZZLE : SPN * EMERGENCY SHOWER : SSH
* STRAINER(Y-TYPE) : YSTR * STRANNER(T-TYPE) : TSTR * STRAINER(BUCKET-TYPE) : BSTR * ANCHOR PLATE : STOP * BIRD SCREEN : BS * ISOLATION KIT : IK * UNLOADING BOX : UB * AIR TRAP : AT * LOTO : LOTO * SIGHT GLASS : SG * PRESSURE GAUGE : PG * SHILED : SH * SPECIAL BOLT & NUT : BL/BL1

CLIENT SK hynix 8

INSULATION	CODE	C	CONDITION	PRESS. (kg/cm2g)	TEMP. (°C)
	THICK.	25	DESIGN	13.5	60
			OPERATING	10	AMB

AREA W14
UNIT R1FA
REF. PLAN DWG. CJ-M15W14-PI-A30-010017-B
REF. P & ID CJ-M15W13-PR-A20-000081

REV. NO.	DATE	DESCRIPTION	BY	CHK	APP'D
0	25.01.24	APPROVED FOR CONSTRUCTION	황대종	안남후	박동영

CONTRACTOR SK ecoplant
PROJECT NAME M15X Ph4 Project
COMMODITY IW
JOB NO. 22330D
LINE NO. 25A-IW-ST1-C-7032
SH'T NO. 01 / 01
REV. 0

경고 : 본 도면은 SK HYNIX의 기업비밀 자료로서, 어떠한 경우에도 목적 외 사용, 복제, 제3자에게 공개, 누설 및 유출할 수 없으며, 회사는 유포자의 불법 사용으로 피해가 발생할 경우 유포자에게 민/형사상 책임을 요구할 수 있음.

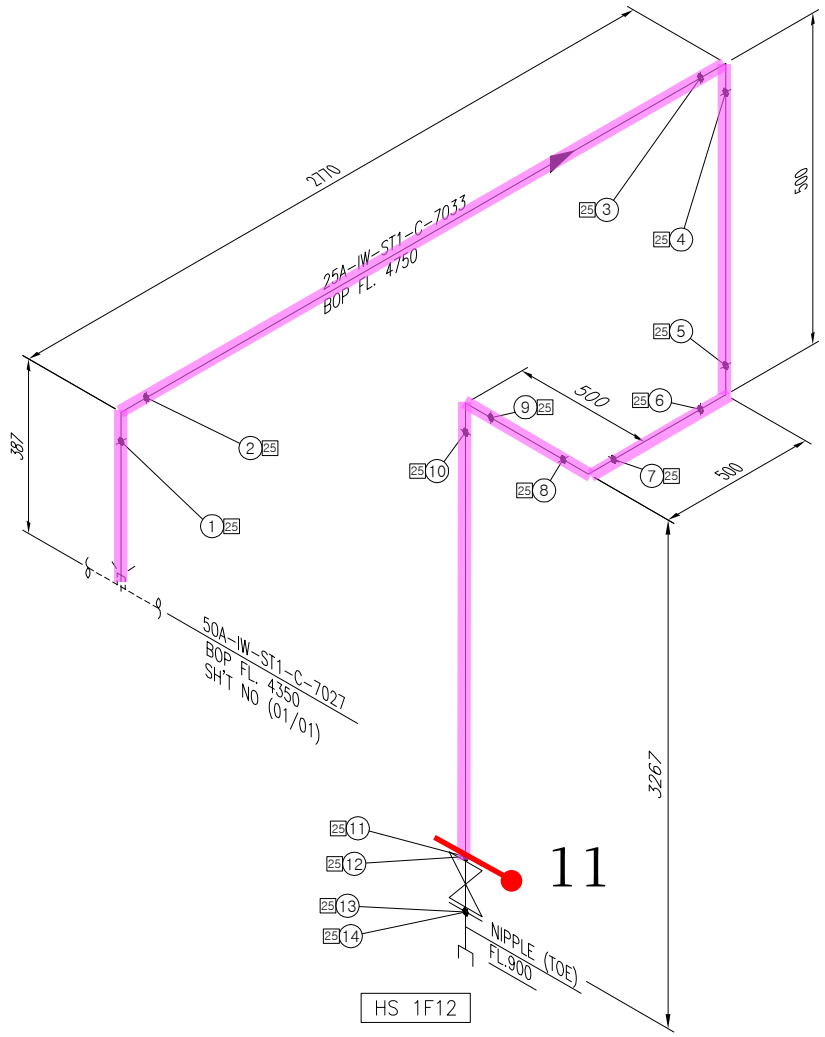

<NOTE>
1. (*) FIELD ADJUST

ITEM	SIZE	Q'TY	DESCRIPTION
		ST1	
P	25A	8M	PIPE, STS 304TP, ERW, PE – SCH 10S
NP1	25A	1EA	NIPPLE, STS 304TP, ERW, T0E – SCH 40S
E90	25A	5EA	ELBOW 90 DEG, STSF304, SW – SCH 10S
VG	25A	1EA	GATE VALVE, KS 10K, RF FLG'D, BODY–STSF304 /
			TRIM–STS304, BB / OS&Y, HANDWHEEL
F	25A	2EA	FLG SO, KS 10K, RF, STS304
G	25A	2EA	GASKET, KS 10K, RF, PTFE+EPDM, 3.0MM TH'K
B	25A	2SET	MACHINE BOLT & NUTS :STS 304 / W WASHERS
SQC	25A	1EA	QUICK COUPLING(MALE)
IN	25tX25A	6.9M	관 보온재(고무발포)

* PIPE : P/P1 * 90° ELBOW : E90 * 45° ELBOW : E45 * TEE : T * RED.TEE : TR * STUB-IN : STU * REINFORCING PAD : RP * CON.RED : RC * ECC.RED : RE * CON.SWAGE : RCS/RCS1 * ECC.SWAGE : RES/RES1 * NIPPLE : NP/NP1/NP2 * CAP : CAP/CAP1 * PLUG : PLG * FULL COUPLING : FC * HALF COUPLING : HF/HF1
* STUB-IN : STU * SOCKET(HDPE/PVC) : SC * SADDLE(HDPE) : SD * FLANGE : F/F1 * GASKET : G/G1/G2 * BOLT & NUT : B/B1 * BLIND FLANGE : FB/FB1 * GATE VA. : VG/VG1/VG2 * BALL VA. : VB/VBL0/VB1/VB1L0/VB2/VB2L0 * BUTTERFLY VA. : VF/VF4 * CHECK VA. : VC/VC1/VC2/VC3/VC4/VC5/VC6/VC7
* GLOBE VA. : VL/VL1/VL2 * DIAPHRAGM VA. : VD/VDL0 * DAMPER : VP * QUICK COUPLING : SQC * FLEXIBLE JOINT(STEEL) : FLXB * FLEXIBLE JOINT(RUBBER) : FLXR * FLEXIBLE JOINT(STEEL_PTFE LINED) : FLXL * FLEXIBLE HOSE : FLXH * STEAM TRAP : ST * SPRAY NOZZLE : SPN * EMERGENCY SHOWER : SSH
* STRAINER(Y-TYPE) : YSTR * STRAINER(T-TYPE) : TSTR * STRAINER(BUCKET-TYPE) : BSTR * ANCHOR PLATE : STOP * BIRD SCREEN : BS * ISOLATION KIT : IK * UNLOADING BOX : UB * AIR TRAP : AT * LOTO : LOTO * SIGHT GLASS : SG * PRESSURE GAUGE : PG * SHILED : SH * SPECIAL BOLT & NUT : BL/BL1

CLIENT SK hynix 9

INSULATION	CODE	C	CONDITION	PRESS. (kg/cm2g)	TEMP. (°C)
	THICK.	25	DESIGN	13.5	60
			OPERATING	10	AMB

AREA W14
UNIT R1FA
REF. PLAN DWG. CJ–M15W14–PI–A30–010017–B
REF. P & ID CJ–M15W13–PR–A20–000081

REV. NO.	DATE	DESCRIPTION	BY	CHK	APP'D
0	25.01.24	APPROVED FOR CONSTRUCTION	황래종	안남후	박동영

CONTRACTOR SK ecoplant
PROJECT NAME M15X Ph4 Project
COMMODITY IW
JOB NO. 22330D
LINE NO. 25A–IW–ST1–C–7033
SH'T NO. 01 / 01
REV. 0

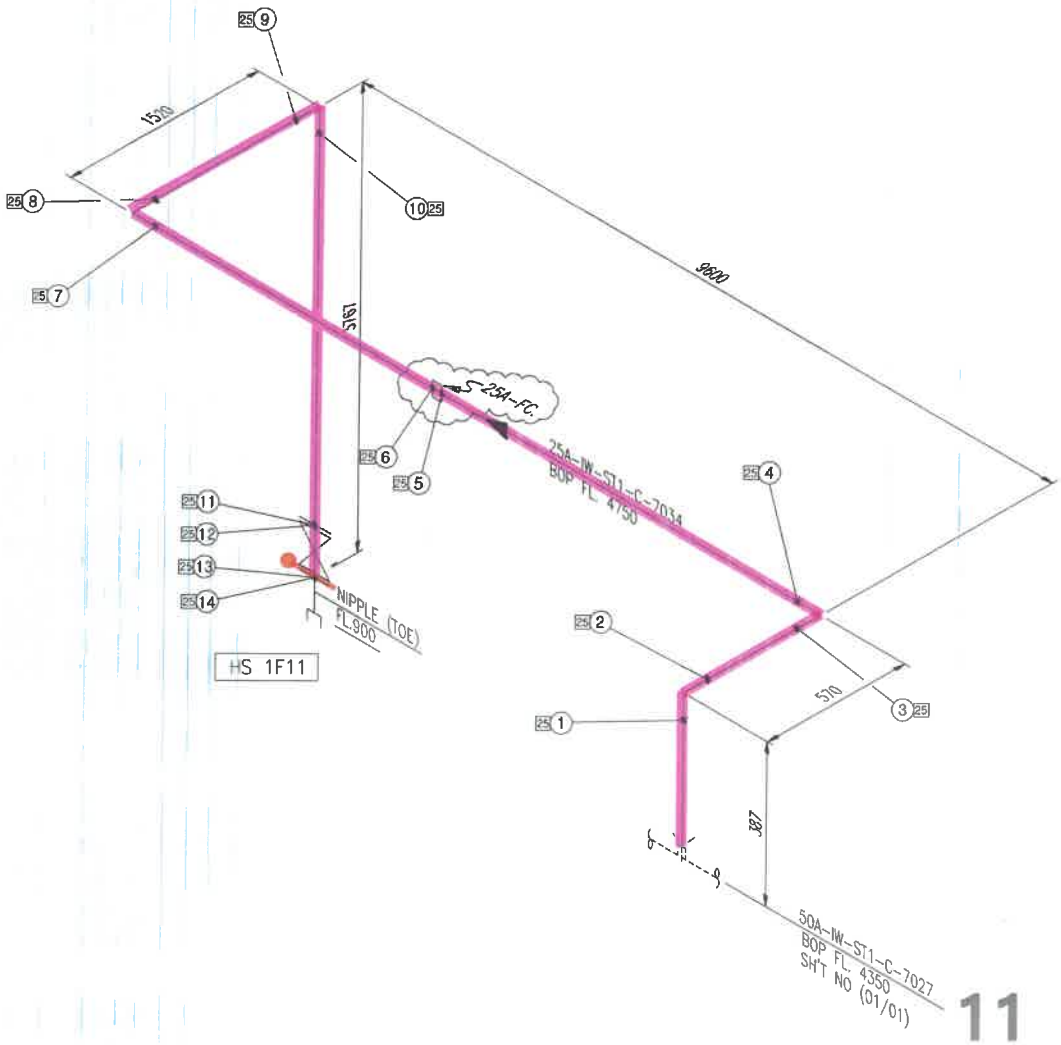

<NOTE>
1. (*) FIELD ADJUST

SK ecoplant

ITEM	SIZE	Q'TY	DESCRIPTION
		ST1	
P	25A	15.8M	PIPE, STS 304TP, ERW, PE – SCH 10S
NP1	25A	1EA	NIPPLE, STS 304TP, ERW, TOE – SCH 40S
E90	25A	4EA	ELBOW 90 DEG, STSF304, SW – SCH 10S
FC	25A	1EA	COUPLING FULL, STSF304, SW – SCH 10S
VG	25A	1EA	GATE VALVE, KS 10K, RF FLG'D, BODY-STSF304 /
			TRIM-STS304, BB / OS&Y, HANDWHEEL
F	25A	2EA	FLG SO, KS 10K, RF, STS304
G	25A	2EA	GASKET, KS 10K, RF, PTFE+EPDM, 3.0MM TH'K
B	25A	2SET	MACHINE BOLT & NUTS :STS 304 / W WASHERS
SQC	25A	1EA	QUICK COUPLING(MALE)
IN	25tX25A	15.8M	곤 보온재(고무발포)

* PIPE : P/P1 * 90° ELBOW : E90 * 45° ELBOW : E45 * TEE : T * RED.TEE : TR * STUB-IN : STU * REINFORCING PAD : RP * CON.RED : RC * ECC.RED : RE * CON.SWAGE : RCS/RCS1 * ECC.SWAGE : RES/RES1 * NIPPLE : NP/NP1/NP2 * CAP : CAP/CAP1 * PLUG : PLG * FULL COUPLING : FC * HALF COUPLING : HF/HF1
* STUB-IN : STU * SOCKET(HDPE/PVC) : SC * SADDLE(HDPE) : SD * FLANGE : F/F1 * GASKET : G/G1/G2 * BOLT & NUT : B/B1 * BLIND FLANGE : FB/FB1 * GATE VA. : VG/VG1/VG2 * BALL VA. : VB/VBLO/VB1/VB1LO/VB2/VB2LO * BUTTERFLY VA. : VF/VF4 * CHECK VA. : VC/VC1/VC2/VC3/VC4/VC5/VC6/VC7
* GLOBE VA. : VL/VL1/VL2 * DIAPHRAGM VA. : VD/VDLO * DAMPER : VP * QUICK COUPLING : SQC * FLEXIBLE JOINT(STEEL) : FLXB * FLEXIBLE JOINT(RUBBER) : FLXR * FLEXIBLE JOINT(STEEL_PTFE LINED) : FLXL * FLEXIBLE HOSE : FLXH * STEAM TRAP : ST * SPRAY NOZZLE : SPN * EMERGENCY SHOWER : SSH
* STRAINER(Y-TYPE) : YSTR * STRAINER(T-TYPE) : TSTR * STRAINER(BUCKET-TYPE) : BSTR * ANCHOR PLATE : STOP * BIRD SCREEN : BS * ISOLATION KIT : IK * UNLOADING BOX : UB * AIR TRAP : AT * LOTO : LOTO * SIGHT GLASS : SG * PRESSURE GAUGE : PG * SHIELD : SH * SPECIAL BOLT & NUT : BL/BL1

CLIENT SK hynix 10

INSULATION	CODE	C	CONDITION	PRESS. (kg/cm2g)	TEMP. (°C)
	THICK.	25	DESIGN	13.5	60
			OPERATING	10	AMB

AREA W14
UNIT R1FA
REF. PLAN DWG. CJ-M15W14-PI-A30-010016-B
REF. P & ID CJ-M15W13-PR-A20-000081

REV. NO.	DATE	DESCRIPTION	BY	CHK	APP'D
0	25.01.24	APPROVED FOR CONSTRUCTION	황래영	안남주	박동영

CONTRACTOR SK ecoplant
PROJECT NAME M15X Ph4 Project
COMMODITY IW
JOB NO. 22330D
LINE NO. 25A-IW-ST1-C-7034
SH'T NO. 01 / 01 REV. 0

경고 : 본 도면은 SK HYNIX의 기업비밀 자료로서, 어떠한 경우에도 목적 외 사용, 복제, 제3자에게 공개, 누설 및 유출할 수 없으며, 회사는 유포자의 불법 사용으로 피해가 발생할 경우 유포자에게 민/형사상 책임을 요구할 수 있음.

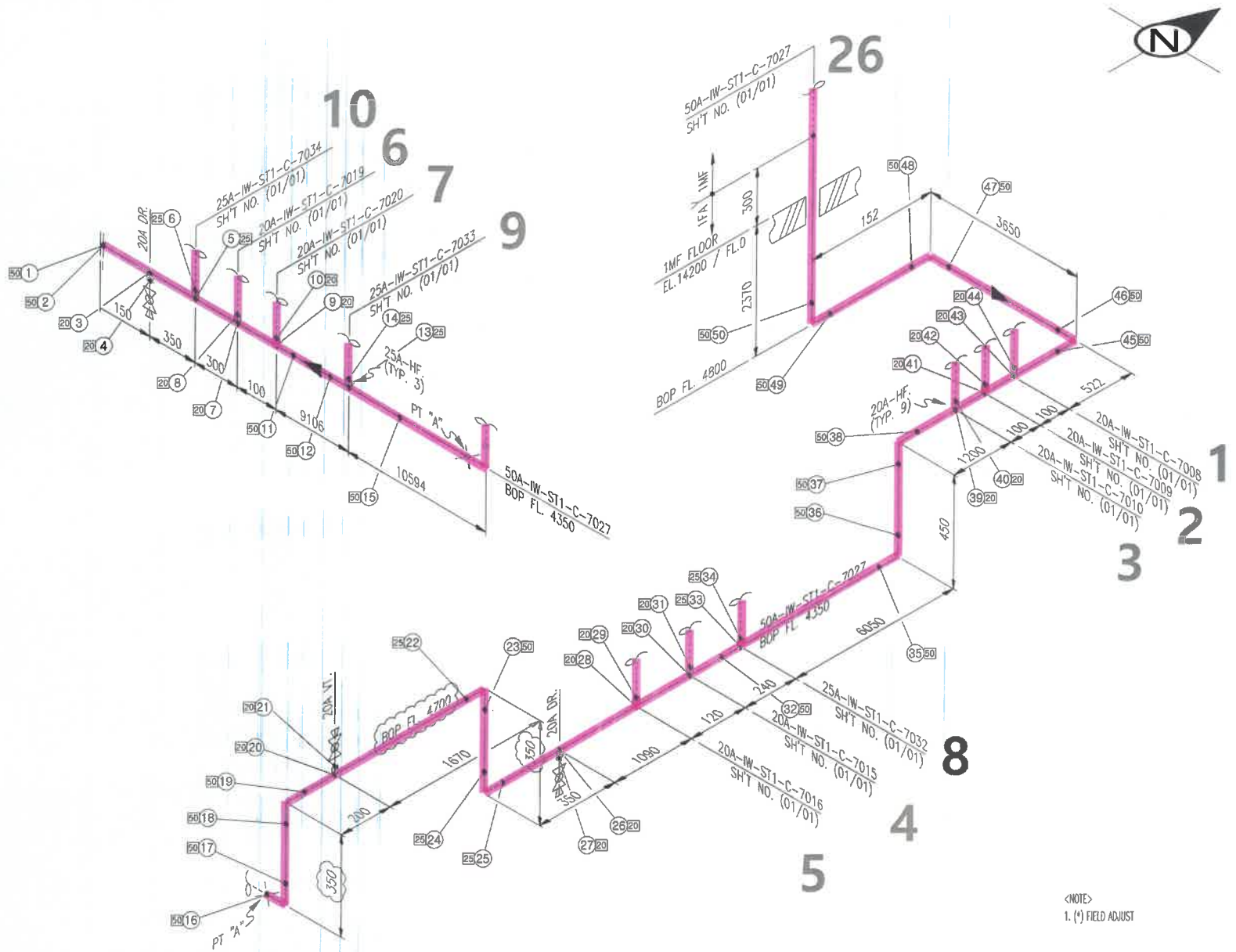

<NOTE>
1. (*) FIELD ADJUST

ITEM	SIZE	Q'TY	DESCRIPTION
		ST1	
P	50A	39.8M	PIPE, STS 304TP, ERW, BE – SCH 10S
E90	50A	9EA	ELBOW 90 DEG LR, STS304, ERW, BE – SCH 10S
NP1	20A	3EA	NIPPLE, STS 304TP, ERW, TOE – SCH 40S
HF	25A	3EA	COUPLING HALF, STSF304, SW – SCH 10S
HF	20A	9EA	COUPLING HALF, STSF304, SW – SCH 10S
PLG	20A	3EA	PLUG ROUND HEAD, STSF304, SCR'D
VB1	20A	3EA	BALL VALVE, KS 10K, SCR'D, BODY-STSF304 /
			TRIM-STS304 / SEAT-PTFE, FB, LEVER
F	50A	1EA	FLG SO, KS 10K, RF, STS304
FB	50A	1EA	FLG BLIND, KS 10K, RF, STS304
G	50A	1EA	GASKET, KS 10K, RF, PTFE+EPDM, 3.0MM TH'K
B	50A	1SET	MACHINE BOLT & NUTS :STS 304 / W WASHERS

* PIPE : P/P1 * 90° ELBOW : E90 * 45° ELBOW : E45 * TEE : T * RED.TEE : TR * STUB-IN : STU * REINFORCING PAD : RP * CON.RED : RC * ECC.RED : RE * CON.SWAGE : RCS/RCS1 * ECC.SWAGE : RES/RES1 * NIPPLE : NP/NP1/NP2 * CAP : CAP/CAP1 * PLUG : PLG * FULL COUPLING : FC * HALF COUPLING : HF/HF1
* STUB-IN : STU * SOCKET(HDPE/PVC) : SC * SADDLE(HDPE) : SD * FLANGE : F/F1 * GASKET : G/G1/G2 * BOLT & NUT : B/B1 * BLIND FLANGE : FB/FB1 * GATE VA. : VG/VG1/VG2 * BALL VA : VB/VBLO/VB1/VB1LO/VB2/VB2LO * BUTTERFLY VA. : VF/VF4 * CHECK VA : VC/VC1/VC2/VC3/VC4/VC5/VC6/VC7
* GLOBE VA. : VL/VL1/VL2 * DIAPHRAGM VA. : VD/VDLO * DAMPER : VP * QUICK COUPLING : SQC * FLEXIBLE JOINT(STEEL) : FLXB * FLEXIBLE JOINT(RUBBER) : FLXR * FLEXIBLE JOINT(STEEL_PTFE LINED) : FLXL * FLEXIBLE HOSE : FLXH * STEAM TRAP : ST * SPRAY NOZZLE : SPN * EMERGENCY SHOWER : SSH
* STRAINER(Y-TYPE) : YSTR * STRAINER(T-TYPE) : TSTR * STRAINER(BUCKET-TYPE) : BSTR * ANCHOR PLATE : STOP * BIRD SCREEN : BS * ISOLATION KIT : IK * UNLOADING BOX : UB * AIR TRAP : AT * LOTO : LOTO * SIGHT GLASS : SG * PRESSURE GAUGE : PG * SHIELD : SH * SPECIAL BOLT & NUT : BL/BL1

CLIENT: SK hynix

11

INSULATION	CODE	C	CONDITION	PRESS. (kg/cm2g)	TEMP. (°C)
	THICK.	–	DESIGN	10	60
			OPERATING	7.5	AMB

AREA W14
UNIT 1FA
REF. PLAN DWG. CJ-M15W14-PI-A30-010017-B
REF. P & ID CJ-M15W13-PR-A20-000081

REV. NO.	DATE	DESCRIPTION	BY	CHK	APP'D
0	25.01.24	APPROVED FOR CONSTRUCTION	황재동	안남우	박동영

CONTRACTOR: SK ecoplant
COMMODITY: IW
LINE NO. 50A-IW-ST1-C-7027
PROJECT NAME: M15X Ph4 Project
JOB NO. 22330D
SH'T NO. 01 / 01
REV. 0

경고 : 본 도면은 SK HYNIX의 기업비밀 자료로서, 어떠한 경우에도 목적 외 사용, 복제, 제3자에게 공개, 누설 및 유출할 수 없으며, 회사는 유포자의 불법 사용으로 피해가 발생할 경우 유포자에게 민/형사상 책임을 요구할 수 있음.

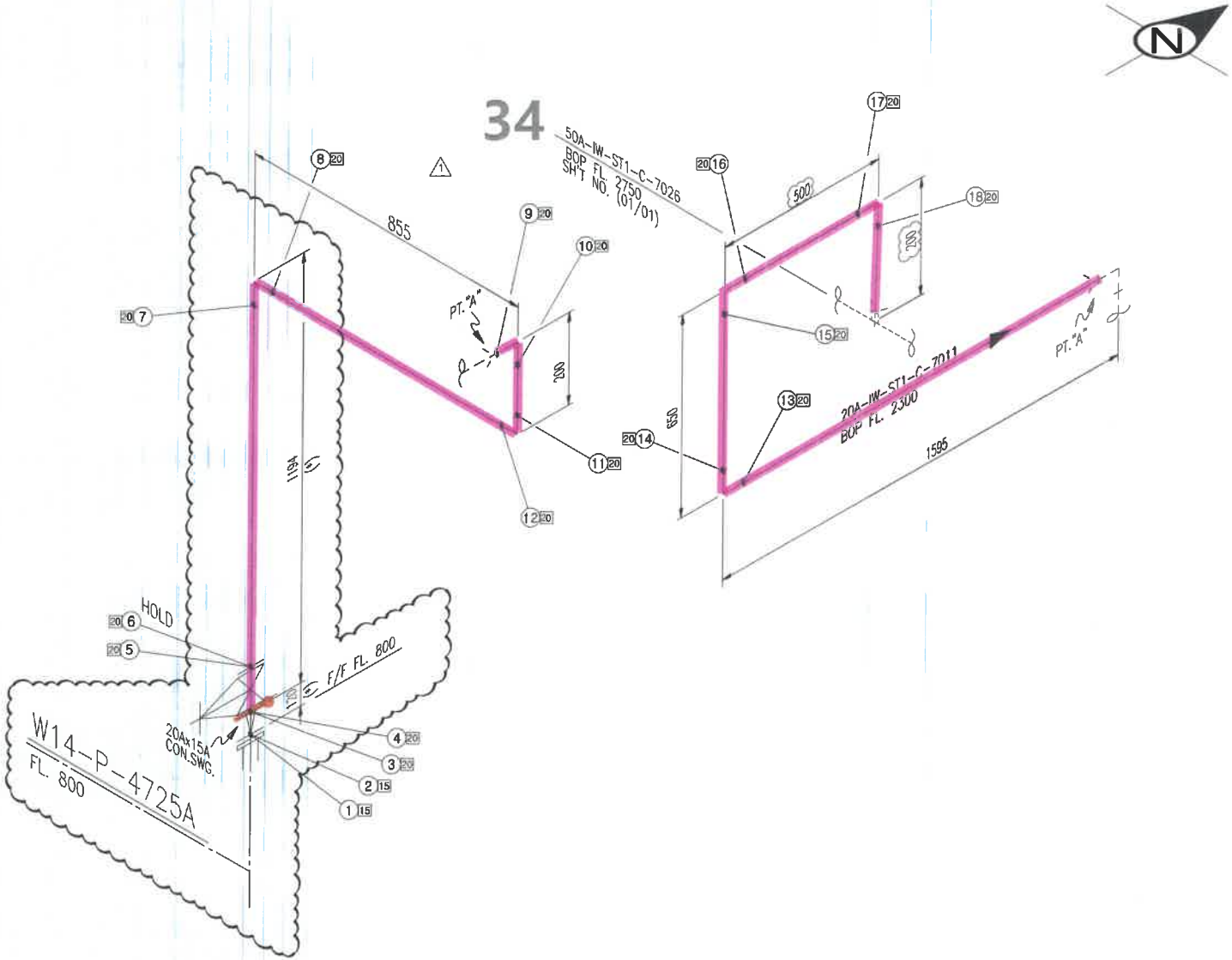

<NOTE>
1. (*) FIELD ADJUST

SK ecoplant

ITEM	SIZE	Q'TY	DESCRIPTION
		ST1	
P	20A	5.3M	PIPE, STS 304TP, ERW, PE - SCH 10S
E90	20A	6EA	ELBOW 90 DEG, STSF304, SW - SCH 10S
RCS	20A×15A	1EA	SWAGE CON, STSF304, PBE - SCH 10S
VG	20A	1EA	GATE VALVE, KS 10K, RF FLG'D, BODY-STSF304 /
			TRIM-STS304, BB / OS&Y, HANDWHEEL
F	20A	2EA	FLG SO, KS 10K, RF, STS304
F	15A	1EA	FLG SO, KS 10K, RF, STS304
G	20A	2EA	GASKET, KS 10K, RF, PTFE+EPDM, 3.0MM TH'K
G	15A	1EA	GASKET, KS 10K, RF, PTFE+EPDM, 3.0MM TH'K
B	20A	2SET	MACHINE BOLT & NUTS :STS 304 / W WASHERS
B	15A	1SET	MACHINE BOLT & NUTS :STS 304 / W WASHERS
IN	25tX20A	4.5M	곤 보온재(2무냉보)

* PIPE : P/P1 * 90° ELBOW : E90 * 45° ELBOW : E45 * TEE : T * REDUCER : RR * STUB-IN : STU * REINFORCING PAD : RP * CON.RED : RC * ECC.RED : RE * CON.SWAGE : RCS/RCS1 * ECC.SWAGE : RES/RES1 * NIPPLE : NP/NP1/NP2 * CAP : CAP/CAP1 * PLUG : PLG * FULL COUPLING : FC * HALF COUPLING : HF/HF1
* STUB-IN : STU * SOCKET(HDPE/PVC) : SC * SADDLE(HDPE) : SD * FLANGE : F/F1 * GASKET : G/G1/G2 * BOLT & NUT : B/B1 * BLIND FLANGE : FB/FB1 * GATE VA. : VG/VG1/VG2 * BALL VA. : VB/VBL0/VB1/VB1L0/VB2/VB2L0 * BUTTERFLY VA. : VF/VF4 * CHECK VA. : VC/VC1/VC2/VC3/VC4/VC5/VC6/VC7
* GLOBE VA. : VL/VL1/VL2 * DIAPHRAGM VA. : VD/VDL0 * DAMPER : VP * QUICK COUPLING : SQC * FLEXIBLE JOINT(STEEL) : FLXB * FLEXIBLE JOINT(RUBBER) : FLXR * FLEXIBLE JOINT(STEEL PTFE LINED) : FLXL * FLEXIBLE HOSE : FLXH * STEAM TRAP : ST * SPRAY NOZZLE : SPN * EMERGENCY SHOWER : SSH
* STRAIN(Y-TYPE) : YSTR * STRAINER(Y-TYPE) : TSTR * STRAINER(BUCKET-TYPE) : BSTR * ANCHOR PLATE : STOP * BIRD SCREEN : BS * ISOLATION KIT : IK * UNLOADING BOX : UB * AIR TRAP : AT * LOTO : LOTO * SIGHT GLASS : SG * PRESSURE GAUGE : PG * SHIELD : SH * SPECIAL BOLT & NUT : BL/BL1

CLIENT SK hynix 12

INSULATION	CODE	C	CONDITION	PRESS. (kg/cm2g)	TEMP. (°C)
	THICK.	25	DESIGN	13.5	60
			OPERATING	10	AMB

AREA W14
UNIT R1MF
REF. PLAN DWG. CJ-M15W14-PI-A30-010017-D
REF. P & ID CJ-M15W13-PR-A20-000081

REV. NO.	DATE	DESCRIPTION	BY	CHK	APP'D
1	25.03.31	REVISED AS MARKED	왕래종	안남후	박동영
0	25.01.24	APPROVED FOR CONSTRUCTION	왕래종	안남후	박동영

CONTRACTOR SK ecoplant
PROJECT NAME M15X Ph4 Project
COMMODITY IW
JOB NO. 22330D
LINE NO. 20A-IW-ST1-C-7011
SH'T NO. 01 / 01
REV. 1

경고 : 본 도면은 SK HYNIX의 기업비밀 자료로서, 어떠한 경우에도 목적 외 사용, 복제, 제3자에게 공개, 누설 및 유출할 수 없으며, 회사는 유포자의 불법 사용으로 피해가 발생할 경우 유포자에게 민/형사상 책임을 요구할 수 있음.

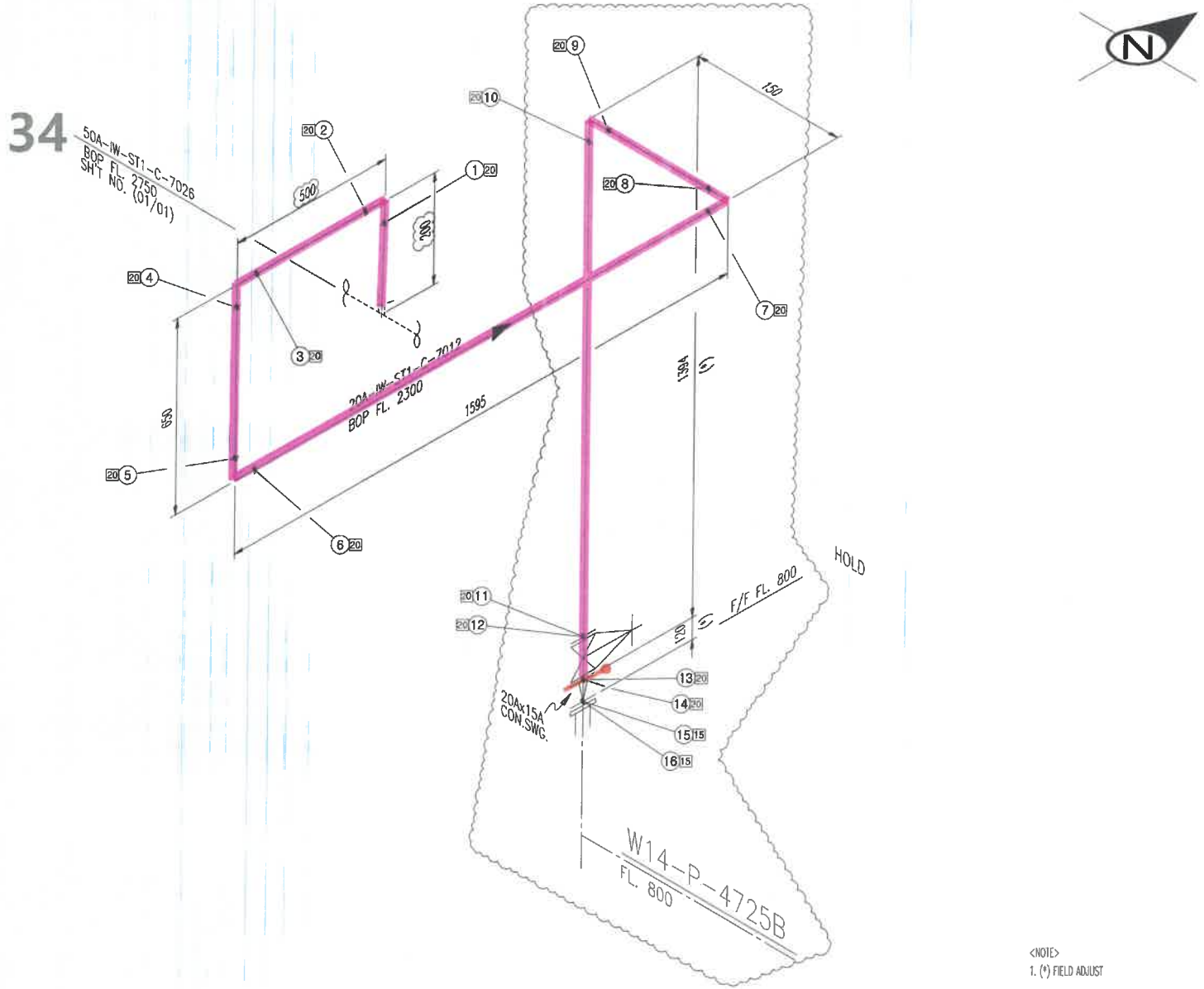

<NOTE>
1. (*) FIELD ADJUST

ITEM	SIZE	Q'TY	DESCRIPTION
		ST1	
P	20A	4.5M	PIPE, STS 304TP, ERW, PE – SCH 10S
E90	20A	5EA	ELBOW 90 DEG, STSF304, SW – SCH 10S
RCS	20Ax15A	1EA	SWAGE CON, STSF304, PBE – SCH 10S
VG	20A	1EA	GATE VALVE, KS 10K, RF FLG'D, BODY-STSF304 /
			TRIM-STS304, BB / OS&Y, HANDWHEEL
F	20A	2EA	FLG SO, KS 10K, RF, STS304
F	15A	1EA	FLG SO, KS 10K, RF, STS304
G	20A	2EA	GASKET, KS 10K, RF, PTFE+EPDM, 3.0MM TH'K
G	15A	1EA	GASKET, KS 10K, RF, PTFE+EPDM, 3.0MM TH'K
B	20A	2SET	MACHINE BOLT & NUTS :STS 304 / W WASHERS
B	15A	1SET	MACHINE BOLT & NUTS :STS 304 / W WASHERS
IN	25tX20A	4.5M	건 보온재(그무보호)

* PIPE : P/P1 * 90° ELBOW : E90 * 45° ELBOW : E45 * TEE : T * RED.TEE : TR * STUB-IN : STU * REINFORCING PAD : RP * CON.RED : RC * ECC.RED : RE * CON.SWAGE : RCS/RCS1 * ECC.SWAGE : RES/RES1 * NIPPLE : NP/NP1/NP2 * CAP : CAP/CAP1 * PLUG : PLG * FULL COUPLING : FC * HALF COUPLING : HF/HF1
* STUB-IN : STU * SOCKET(HDPE/PVC) : SC * SADDLE(HDPE) : SD * FLANGE : F/F1 * GASKET : G/G1/G2 * BOLT & NUT : B/B1 * BLIND FLANGE : FB/FB1 * GATE VA. : VG/VG1/VG2 * BALL VA. : VB/VBLO/VB1/VB1LO/VB2/VB2LO * BUTTERFLY VA. : VF/VF4 * CHECK VA. : VC/VC1/VC2/VC3/VC4/VC5/VC6/VC7
* GLOBE VA. : VL/VL1/VL2 * DIAPHRAGM VA. : VD/VDLO * DAMPER : VP * QUICK COUPLING : SQC * FLEXIBLE JOINT(STEEL) : FLXB * FLEXIBLE JOINT(RUBBER) : FLXR * FLEXIBLE JOINT(STEEL PTFE LINED) : FLXL * FLEXIBLE HOSE : FLXH * STEAM TRAP : ST * SPRAY NOZZLE : SPN * EMERGENCY SHOWER : SSH
* STRAINER(Y-TYPE) : YSTR * STRAINER(T-TYPE) : TSTR * STRAINER(BUCKET-TYPE) : BSTR * ANCHOR PLATE : STOP * BIRD SCREEN : BS * ISOLATION KIT : IK * UNLOADING BOX : UB * AIR TRAP : AT * LOTO : LOTO * SIGHT GLASS : SG * PRESSURE GAUGE : PG * SHIELD : SH * SPECIAL BOLT & NUT : BL/BL1

CLIENT SK hynix 13

INSULATION	CODE	C	CONDITION	PRESS. (kg/cm2g)	TEMP. (°C)
	THICK.	25	DESIGN	13.5	60
			OPERATING	10	AMB

AREA W14
UNIT R1MF
REF. PLAN DWG. CJ-M15W14-PI-A30-010018-C
REF. P & ID CJ-M15W13-PR-A20-000081

REV. NO.	DATE	DESCRIPTION	BY	CHK	APP'D
0	25.01.24	APPROVED FOR CONSTRUCTION	황래종	안남후	박동영

CONTRACTOR SK ecoplant
COMMODITY IW
LINE NO. 20A-IW-ST1-C-7012
PROJECT NAME M15X Ph4 Project
JOB NO. 22330D
SH'T NO. 01 / 01
REV. 0

경고 : 본 도면은 SK HYNIX의 기업비밀 자료로서, 어떠한 경우에도 목적 외 사용, 복제, 제3자에게 공개, 누설 및 유출할 수 없으며, 회사는 유포자의 불법 사용으로 피해가 발생할 경우 유포자에게 민/형사상 책임을 요구할 수 있음.

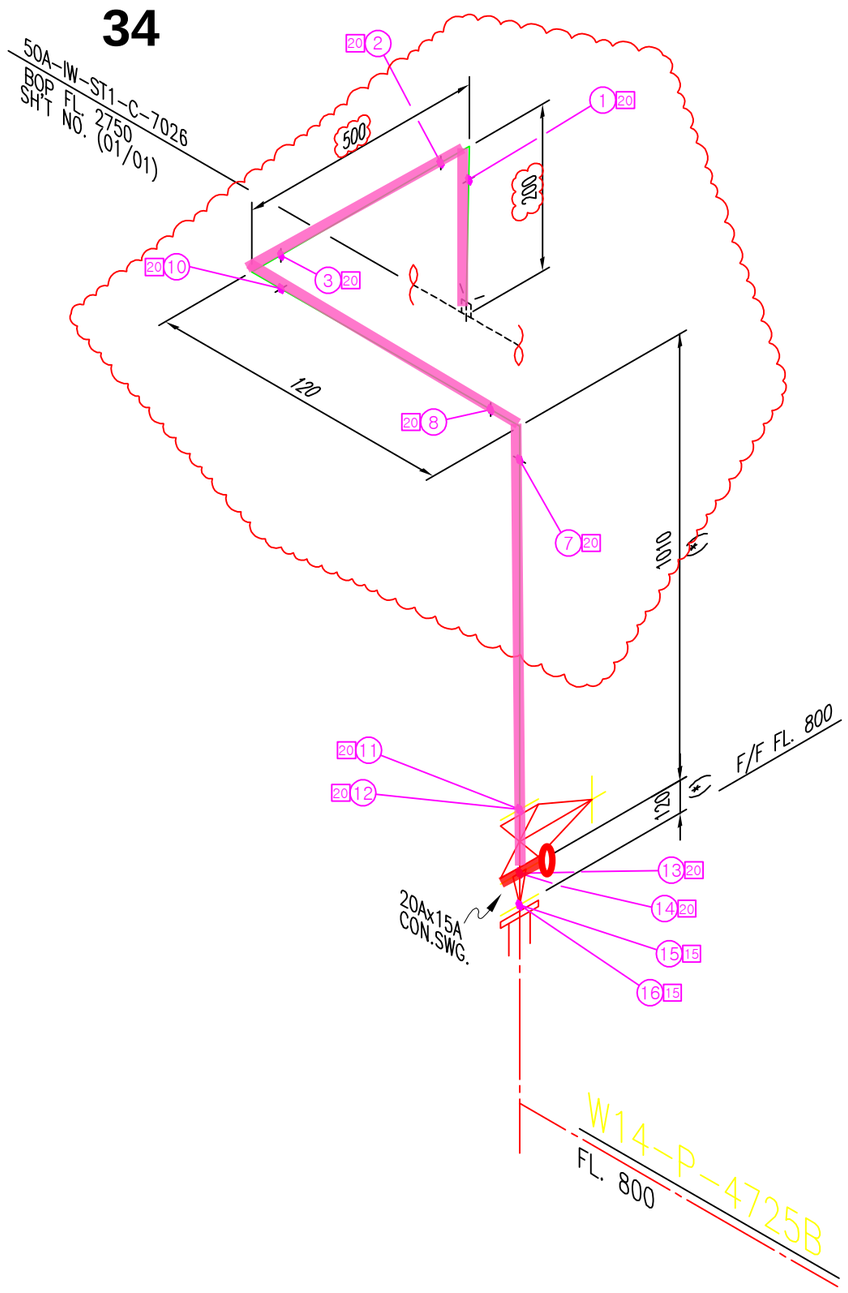

<NOTE>
1. (*) FIELD ADJUST

ITEM	SIZE	Q'TY	DESCRIPTION
		ST1	
P	20A	1.8M	PIPE, STS 304TP, ERW, PE – SCH 10S
E90	20A	3EA	ELBOW 90 DEG, STSF304, SW – SCH 10S
RCS	20Ax15A	1EA	SWAGE CON, STSF304, PBE – SCH 10S
VG	20A	1EA	GATE VALVE, KS 10K, RF FLG'D, BODY-STSF304 / TRIM-STS304, BB / OS&Y, HANDWHEEL
F	20A	2EA	FLG SO, KS 10K, RF, STS304
F	15A	1EA	FLG SO, KS 10K, RF, STS304
G	20A	2EA	GASKET, KS 10K, RF, PTFE+EPDM, 3.0MM TH'K
G	15A	1EA	GASKET, KS 10K, RF, PTFE+EPDM, 3.0MM TH'K
B	20A	2SET	MACHINE BOLT & NUTS :STS 304 / W WASHERS
B	15A	1SET	MACHINE BOLT & NUTS :STS 304 / W WASHERS
IN	25tX20A	4.5M	관 보온재(고무발포)

* PIPE : P/P1 * 90° ELBOW : E90 * 45° ELBOW : E45 * TEE : T * RED.TEE : TR * STUB-IN : STU * REINFORCING PAD : RP * CON.RED : RC * ECC.RED : RE * CON.SWAGE : RCS/RCS1 * ECC.SWAGE : RES/RES1 * NIPPLE : NP/NP1/NP2 * CAP : CAP/CAP1 * PLUG : PLG * FULL COUPLING : FC * HALF COUPLING : HF/HF1
* STUB-IN : STU * SOCKET(HDPE/PVC) : SC * SADDLE(HDPE) : SD * FLANGE : F/F1 * GASKET : G/G1/G2 * BOLT & NUT : B/B1 * BLIND FLANGE : FB/FB1 * GATE VA. : VG/VG1/VG2 * BALL VA. : VB/VBL0/VB1/VB1L0/VB2/VB2L0 * BUTTERFLY VA. : VF/VF4 * CHECK VA. : VC/VC1/VC2/VC3/VC4/VC5/VC6/VC7
* GLOBE VA. : VL/VL1/VL2 * DIAPHRAGM VA. : VD/VDL0 * DAMPER : VP * QUICK COUPLING : SQC * FLEXIBLE JOINT(STEEL) : FLXB * FLEXIBLE JOINT(RUBBER) : FLXR * FLEXIBLE JOINT(STEEL_PTFE LINED) : FLXL * FLEXIBLE HOSE : FLXH * STEAM TRAP : ST * SPRAY NOZZLE : SPN * EMERGENCY SHOWER : SSH
* STRAINER(Y-TYPE) : YSTR * STRAINER(T-TYPE) : TSTR * STRAINER(BUCKET-TYPE) : BSTR * ANCHOR PLATE : STOP * BIRD SCREEN : BS * ISOLATION KIT : IK * UNLOADING BOX : UB * AIR TRAP : AT * LOTO : LOTO * SIGHT GLASS : SG * PRESSURE GAUGE : PG * SHILED : SH * SPECIAL BOLT & NUT : BL/BL1

CLIENT: SK hynix

13

INSULATION	CODE	C	CONDITION	PRESS. (kg/cm2g)	TEMP. (°C)
	THICK.	25	DESIGN	13.5	60
			OPERATING	10	AMB

AREA: W14
UNIT: R1MF
REF. PLAN DWG.: CJ-M15W14-PI-A30-010018-C
REF. P & ID: CJ-M15W13-PR-A20-000081

REV. NO.	DATE	DESCRIPTION	BY	CHK	APP'D
0	25.01.24	APPROVED FOR CONSTRUCTION	황래종	안남후	박동영

CONTRACTOR: SK ecoplant
COMMODITY: IW
LINE NO.: 20A-IW-ST1-C-7012
PROJECT NAME: M15X Ph4 Project
JOB NO.: 22330D
SH'T NO.: 01 / 01
REV.: 0

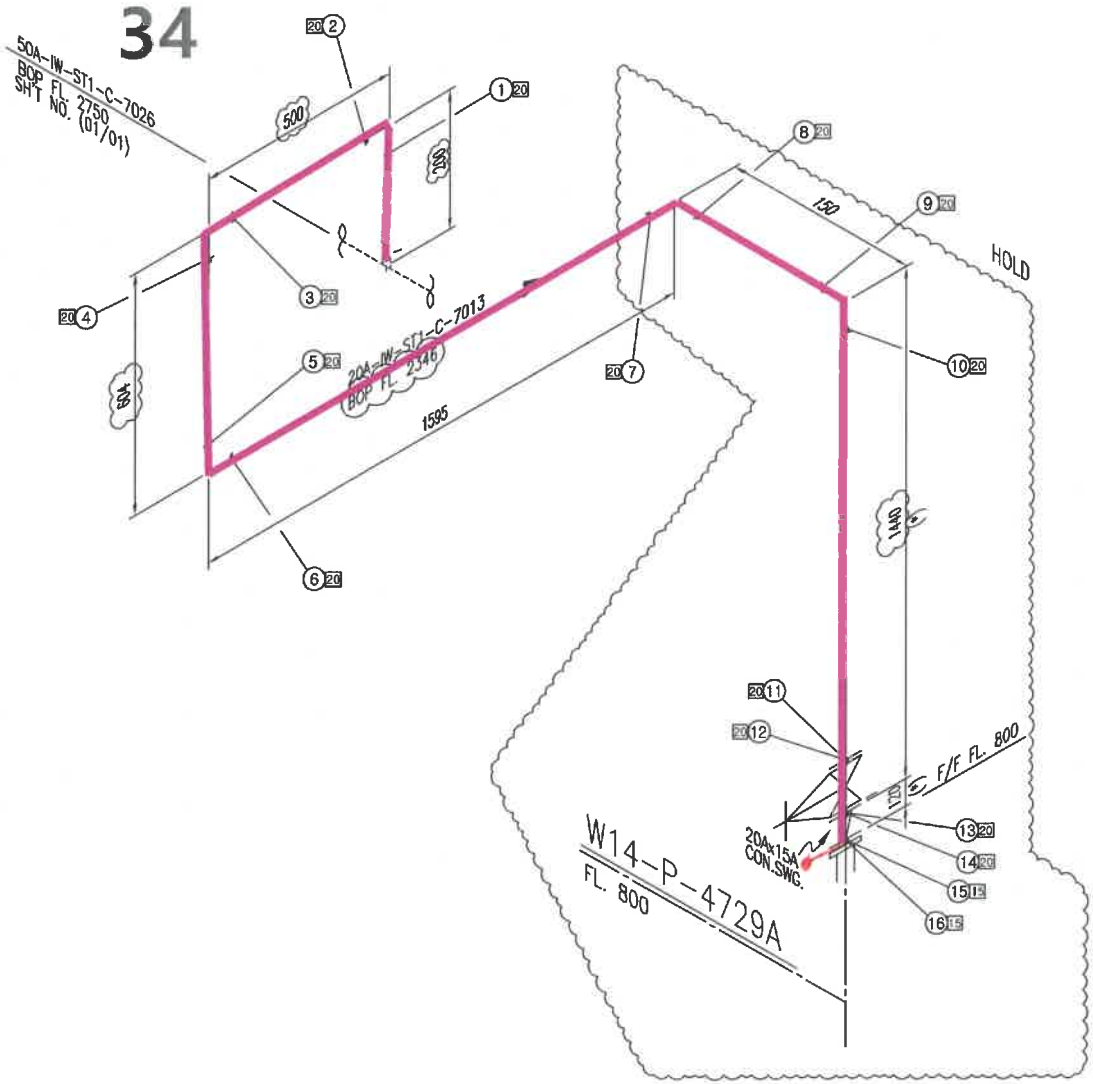

<NOTE>
1. (*) FIELD ADJUST

SK ecoplant

ITEM	SIZE	Q'TY	DESCRIPTION
		ST1	
P	20A	4.5M	PIPE, STS 304TP, ERW, PE – SCH 10S
E90	20A	5EA	ELBOW 90 DEG, STSF304, SW – SCH 10S
RCS	20A×15A	1EA	SWAGE CON, STSF304, PBE – SCH 10S
VG	20A	1EA	GATE VALVE, KS 10K, RF FLG'D, BODY–STSF304 /
			TRIM–STS304, BB / OS&Y, HANDWHEEL
F	20A	2EA	FLG SO, KS 10K, RF, STS304
F	15A	1EA	FLG SO, KS 10K, RF, STS304
G	20A	2EA	GASKET, KS 10K, RF, PTFE+EPDM, 3.0MM TH'K
G	15A	1EA	GASKET, KS 10K, RF, PTFE+EPDM, 3.0MM TH'K
B	20A	2SET	MACHINE BOLT & NUTS :STS 304 / W WASHERS
B	15A	1SET	MACHINE BOLT & NUTS :STS 304 / W WASHERS
IN	25'X20A	4.5M	곤 보온재(고무발포)

* PIPE : P/P1 * 90° ELBOW : E90 * 45° ELBOW : E45 * TEE : T * RED.TEE : TR * STUB-IN : STU * REINFORCING PAD : RP * CON.RED : RC * ECC.RED : RE * CON.SWAGE : RCS/RCS1 * ECC.SWAGE : RES/RES1 * NIPPLE : NP/NP1/NP2 * CAP : CAP/CAP1 * PLUG : PLG * FULL COUPLING : FC * HALF COUPLING : HF/HF1
* STUB-IN : STU * SOCKET(HDPE/PVC) : SC * SADDLE(HDPE) : SD * FLANGE : F/F1 * GASKET : G/G1/G2 * BOLT & NUT : B/B1 * BLIND FLANGE : FB/FB1 * GATE VA. : VG/VG1/VG2 * BALL VA. : VB/VBLO/VB1/VB1LO/VB2/VB2LO * BUTTERFLY VA. : VF/VF4 * CHECK VA. : VC/VC1/VC2/VC3/VC4/VC5/VC6/VC7
* GLOBE VA. : VL/VL1/VL2 * DIAPHRAGM VA. : VD/VDLO * DAMPER : VP * QUICK COUPLING : SQC * FLEXIBLE JOINT(STEEL) : FLXB * FLEXIBLE JOINT(RUBBER) : FLXR * FLEXIBLE JOINT(STEEL_PTFE LINED) : FLXL * FLEXIBLE HOSE : FLXH * STEAM TRAP : ST * SPRAY NOZZLE : SPN * EMERGENCY SHOWER : SSH
* STRAINER(Y-TYPE) : YSTR * STRAINER(T-TYPE) : TSTR * STRAINER(BUCKET-TYPE) : BSTR * ANCHOR PLATE : STOP * BIRD SCREEN : BS * ISOLATION KIT : IK * UNLOADING BOX : UB * AIR TRAP : AT * LOTO : LOTO * SIGHT GLASS : SG * PRESSURE GAUGE : PG * SHIELD : SH * SPECIAL BOLT & NUT : BL/BL1

CLIENT SK hynix 14

INSULATION	CODE	C	CONDITION	PRESS. (kg/cm2g)	TEMP. (°C)
	THICK.	25	DESIGN	13.5	60
			OPERATING	10	AMB

AREA W14
UNIT R1MF
REF. PLAN DWG. CJ-M15W14-PI-A30-010018-C
REF. P & ID CJ-M15W13-PR-A20-000081

REV. NO.	DATE	DESCRIPTION	BY	CHK	APP'D
0	25.01.24	APPROVED FOR CONSTRUCTION	황래중	안남후	박동영

CONTRACTOR SK ecoplant
COMMODITY IW
LINE NO. 20A-IW-ST1-C-7013
PROJECT NAME M15X Ph4 Project
JOB NO. 22330D
SH'T NO. 01 / 01
REV. 0

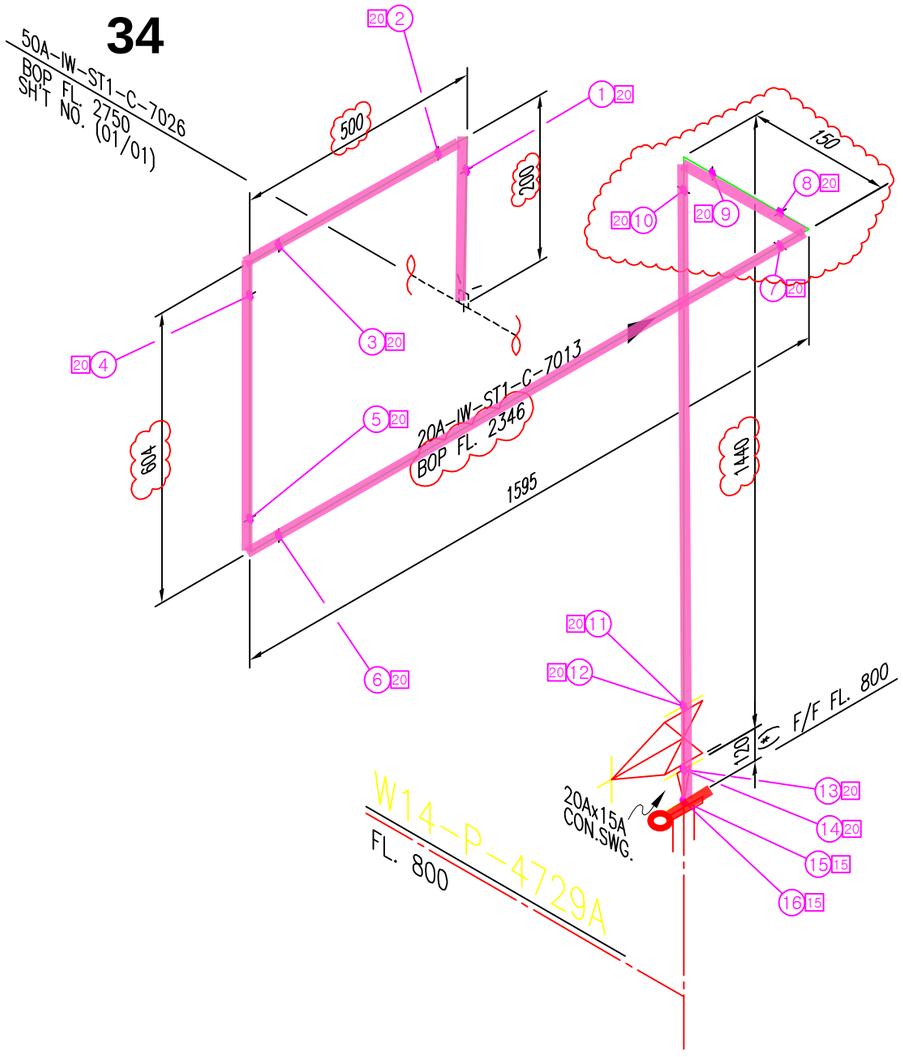

<NOTE>
1. (*) FIELD ADJUST

ITEM	SIZE	Q'TY	DESCRIPTION
		ST1	
P	20A	4.5M	PIPE, STS 304TP, ERW, PE – SCH 10S
E90	20A	5EA	ELBOW 90 DEG, STSF304, SW – SCH 10S
RCS	20Ax15A	1EA	SWAGE CON, STSF304, PBE – SCH 10S
VG	20A	1EA	GATE VALVE, KS 10K, RF FLG'D, BODY–STSF304 /
			TRIM–STS304, BB / OS&Y, HANDWHEEL
F	20A	2EA	FLG SO, KS 10K, RF, STS304
F	15A	1EA	FLG SO, KS 10K, RF, STS304
G	20A	2EA	GASKET, KS 10K, RF, PTFE+EPDM, 3.0MM TH'K
G	15A	1EA	GASKET, KS 10K, RF, PTFE+EPDM, 3.0MM TH'K
B	20A	2SET	MACHINE BOLT & NUTS :STS 304 / W WASHERS
B	15A	1SET	MACHINE BOLT & NUTS :STS 304 / W WASHERS
IN	25tX20A	4.5M	관 보온재(고무발포)

* PIPE : P/P1 * 90° ELBOW : E90 * 45° ELBOW : E45 * TEE : T * RED.TEE : TR * STUB-IN : STU * REINFORCING PAD : RP * CON.RED : RC * ECC.RED : RE * CON.SWAGE : RCS/RCS1 * ECC.SWAGE : RES/RES1 * NIPPLE : NP/NP1/NP2 * CAP : CAP/CAP1 * PLUG : PLG * FULL COUPLING : FC * HALF COUPLING : HF/HF1
* STUB-IN : STU * SOCKET(HDPE/PVC) : SC * SADDLE(HDPE) : SD * FLANGE : F/F1 * GASKET : G/G1/G2 * BOLT & NUT : B/B1 * BLIND FLANGE : FB/FB1 * GATE VA. : VG/VG1/VG2 * BALL VA. : VB/VBLO/VB1/VB1LO/VB2/VB2LO * BUTTERFLY VA. : VF/VF4 * CHECK VA. : VC/VC1/VC2/VC3/VC4/VC5/VC6/VC7
* GLOBE VA. : VL/VL1/VL2 * DIAPHRAGM VA. : VD/VDLO * DAMPER : VP * QUICK COUPLING : SQC * FLEXIBLE JOINT(STEEL) : FLXB * FLEXIBLE JOINT(RUBBER) : FLXR * FLEXIBLE JOINT(STEEL PTFE LINED) : FLXL * FLEXIBLE HOSE : FLXH * STEAM TRAP : ST * SPRAY NOZZLE : SPN * EMERGENCY SHOWER : SSH
* STRAINER(Y-TYPE) : YSTR * STRAINER(T-TYPE) : TSTR * STRAINER(BUCKET-TYPE) : BSTR * ANCHOR PLATE : STOP * BIRD SCREEN : BS * ISOLATION KIT : IK * UNLOADING BOX : UB * AIR TRAP : AT * LOTO : LOTO * SIGHT GLASS : SG * PRESSURE GAUGE : PG * SHILED : SH * SPECIAL BOLT & NUT : BL/BL1

CLIENT: SK hynix

14

INSULATION	CODE	C	CONDITION	PRESS. (kg/cm2g)	TEMP. (°C)
	THICK.	25	DESIGN	13.5	60
			OPERATING	10	AMB

AREA: W14
UNIT: R1MF
REF. PLAN DWG.: CJ-M15W14-PI-A30-010018-C
REF. P & ID: CJ-M15W13-PR-A20-000081

REV. NO.	DATE	DESCRIPTION	BY	CHK	APP'D
0	25.01.24	APPROVED FOR CONSTRUCTION	황래종	안남후	박동영

CONTRACTOR: SK ecoplant
COMMODITY: IW
LINE NO.: 20A-IW-ST1-C-7013
PROJECT NAME: M15X Ph4 Project
JOB NO.: 22330D
SH'T NO.: 01 / 01
REV.: 0

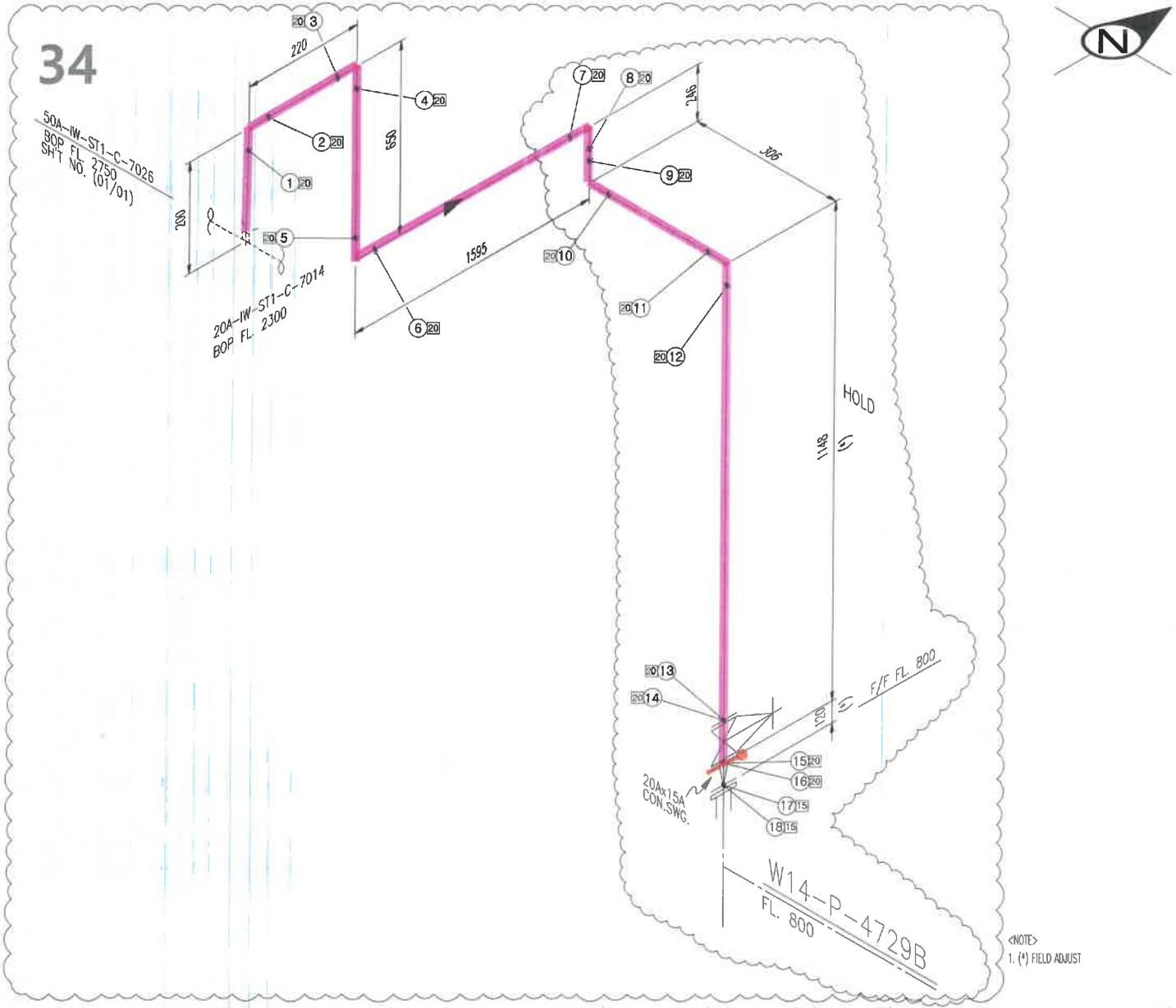

<NOTE>
1. (*) FIELD ADJUST

SK ecoplant

ITEM	SIZE	Q'TY	DESCRIPTION
		ST1	
P	20A	4.5M	PIPE, STS 304TP, ERW, PE - SCH 10S
E90	20A	6EA	ELBOW 90 DEG, STSF304, SW - SCH 10S
RCS	20Ax15A	1EA	SWAGE CON, STSF304, PBE - SCH 10S
VG	20A	1EA	GATE VALVE, KS 10K, RF FLG'D, BODY-STSF304 /
			TRIM-STS304, BB / OS&Y, HANDWHEEL
F	20A	2EA	FLG SO, KS 10K, RF, STS304
F	15A	1EA	FLG SO, KS 10K, RF, STS304
G	20A	2EA	GASKET, KS 10K, RF, PTFE+EPDM, 3.0MM TH'K
G	15A	1EA	GASKET, KS 10K, RF, PTFE+EPDM, 3.0MM TH'K
B	20A	2SET	MACHINE BOLT & NUTS :STS 304 / W WASHERS
B	15A	1SET	MACHINE BOLT & NUTS :STS 304 / W WASHERS
IN	25tX20A	4.5M	관 보온재(2무배보)

* PIPE : P/P1 * 90° ELBOW : E90 * 45° ELBOW : E45 * TEE : T * RED.TEE : TR * STUB-IN : STU * REINFORCING PAD : RP * CON.RED : RC * ECC.RED : RE * CON.SWAGE : RCS/RCS1 * ECC.SWAGE : RES/RES1 * NIPPLE : NP/NP1/NP2 * CAP : CAP/CAP1 * PLUG : PLG * FULL COUPLING : FC * HALF COUPLING : HF/HF1
* STUB-IN : STU * SOCKET(HDPE/PVC) : SC * SADDLE(HDPE) : SD * FLANGE : F/F1 * GASKET : G/G1/G2 * BOLT & NUT : B/B1 * BLIND FLANGE : FB/FB1 * GATE VA. : VG/VG1/VG2 * BALL VA. : VB/VB1LO/VB1/VB1LO/VB2/VB2LO * BUTTERFLY VA. : VF/VF4 * CHECK VA. : VC/VC1/VC2/VC3/VC4/VC5/VC6/VC7
* GLOBE VA. : VL/VL1/VL2 * DIAPHRAGM VA. : VD/VDLO * DAMPER : VP * QUICK COUPLING : SQC * FLEXIBLE JOINT(STEEL) : FLXB * FLEXIBLE JOINT(RUBBER) : FLXR * FLEXIBLE JOINT(STEEL PTFE LINED) : FLXL * FLEXIBLE HOSE : FLXH * STEAM TRAP : ST * SPRAY NOZZLE : SPN * EMERGENCY SHOWER : SSH
* STRAINER(Y-TYPE) : YSTR * STRAINER(I-TYPE) : ISTR * STRAINER(BUCKET-TYPE) : BSTR * ANCHOR PLATE : STOP * BIRD SCREEN : BS * ISOLATION KIT : IK * UNLOADING BOX : UB * AIR TRAP : AT * LOTO : LOTO * SIGHT GLASS : SG * PRESSURE GAUGE : PG * SHIELD : SH * SPECIAL BOLT & NUT : BL/BL1

CLIENT SK hynix 15

INSULATION	CODE	C	CONDITION	PRESS. (kg/cm2g)	TEMP. (°C)	AREA W14
	THICK.	25	DESIGN	13.5	60	UNIT R1MF
			OPERATING	10	AMB	REF. PLAN DWG. CJ-M15W14-PI-A30-010018-C
						REF. P & ID CJ-M15W13-PR-A20-000081

REV. NO.	DATE	DESCRIPTION	BY	CHK	APP'D
0	25.01.24	APPROVED FOR CONSTRUCTION	황재동	안남우	박동영

CONTRACTOR SK ecoplant
PROJECT NAME M15X Ph4 Project
COMMODITY IW
JOB NO. 22330D
LINE NO. 20A-IW-ST1-C-7014
SH'T NO. 01 / 01
REV. 0

경고 : 본 도면은 SK HYNIX의 기업비밀 자료로서, 어떠한 경우에도 목적 외 사용, 복제, 제3자에게 공개, 누설 및 유출할 수 없으며, 회사는 유포자의 불법 사용으로 피해가 발생할 경우 유포자에게 민/형사상 책임을 요구할 수 있음.

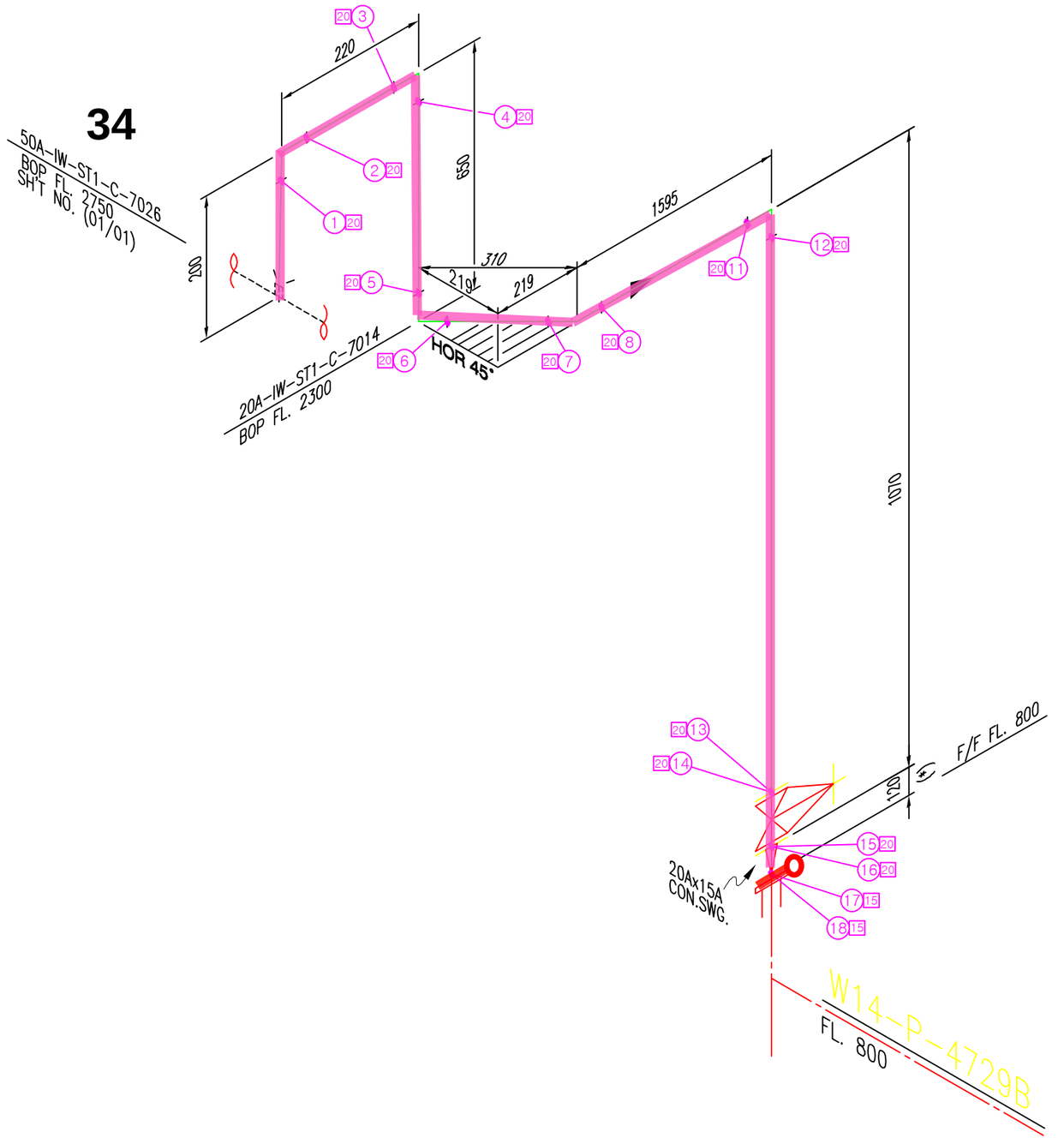

<NOTE>
1. (*) FIELD ADJUST

ITEM	SIZE	Q'TY	DESCRIPTION
		ST1	
P	20A	4.5M	PIPE, STS 304TP, ERW, PE – SCH 10S
E90	20A	4EA	ELBOW 90 DEG, STSF304, SW – SCH 10S
E45	20A	1EA	ELBOW 45 DEG, STSF304, SW – SCH 10S
RCS	20A×15A	1EA	SWAGE CON, STSF304, PBE – SCH 10S
VG	20A	1EA	GATE VALVE, KS 10K, RF FLG'D, BODY–STSF304 /
			TRIM–STS304, BB / OS&Y, HANDWHEEL
F	20A	2EA	FLG SO, KS 10K, RF, STS304
F	15A	1EA	FLG SO, KS 10K, RF, STS304
G	20A	2EA	GASKET, KS 10K, RF, PTFE+EPDM, 3.0MM TH'K
G	15A	1EA	GASKET, KS 10K, RF, PTFE+EPDM, 3.0MM TH'K
B	20A	2SET	MACHINE BOLT & NUTS :STS 304 / W WASHERS
B	15A	1SET	MACHINE BOLT & NUTS :STS 304 / W WASHERS
IN	25tX20A	4.5M	관 보온재(고무발포)

* PIPE : P/P1 * 90° ELBOW : E90 * 45° ELBOW : E45 * TEE : T * RED.TEE : TR * STUB-IN : STU * REINFORCING PAD : RP * CON.RED : RC * ECC.RED : RE * CON.SWAGE : RCS/RCS1 * ECC.SWAGE : RES/RES1 * NIPPLE : NP/NP1/NP2 * CAP : CAP/CAP1 * PLUG : PLG * FULL COUPLING : FC * HALF COUPLING : HF/HF1
* STUB-IN : STU * SOCKET(HDPE/PVC) : SC * SADDLE(HDPE) : SD * FLANGE : F/F1 * GASKET : G/G1/G2 * BOLT & NUT : B/B1 * BLIND FLANGE : FB/FB1 * GATE VA. : VG/VG1/VG2 * BALL VA. : VB/VBLO/VB1/VB1LO/VB2/VB2LO * BUTTERFLY VA. : VF/VF4 * CHECK VA. : VC/VC1/VC2/VC3/VC4/VC5/VC6/VC7
* GLOBE VA. : VL/VL1/VL2 * DIAPHRAGM VA. : VD/VDLO * DAMPER : VP * QUICK COUPLING : SQC * FLEXIBLE JOINT(STEEL) : FLXB * FLEXIBLE JOINT(RUBBER) : FLXR * FLEXIBLE JOINT(STEEL_PTFE LINED) : FLXL * FLEXIBLE HOSE : FLXH * STEAM TRAP : ST * SPRAY NOZZLE : SPN * EMERGENCY SHOWER : SSH
* STRAINER(Y-TYPE) : YSTR * STRAINER(T-TYPE) : TSTR * STRAINER(BUCKET-TYPE) : BSTR * ANCHOR PLATE : STOP * BIRD SCREEN : BS * ISOLATION KIT : IK * UNLOADING BOX : UB * AIR TRAP : AT * LOTO : LOTO * SIGHT GLASS : SG * PRESSURE GAUGE : PG * SHILED : SH * SPECIAL BOLT & NUT : BL/BL1

CLIENT: SK hynix

15

INSULATION	CODE	C	CONDITION	PRESS. (kg/cm2g)	TEMP. (°C)
	THICK.	25	DESIGN	13.5	60
			OPERATING	10	AMB

AREA: W14
UNIT: R1MF
REF. PLAN DWG.: CJ-M15W14-PI-A30-010018-C
REF. P & ID: CJ-M15W13-PR-A20-000081

REV. NO.	DATE	DESCRIPTION	BY	CHK	APP'D
0	25.01.24	APPROVED FOR CONSTRUCTION	황래종	안남후	박동영

CONTRACTOR: SK ecoplant
COMMODITY: IW
LINE NO.: 20A-IW-ST1-C-7014
PROJECT NAME: M15X Ph4 Project
JOB NO.: 22330D
SH'T NO.: 01 / 01
REV.: 0

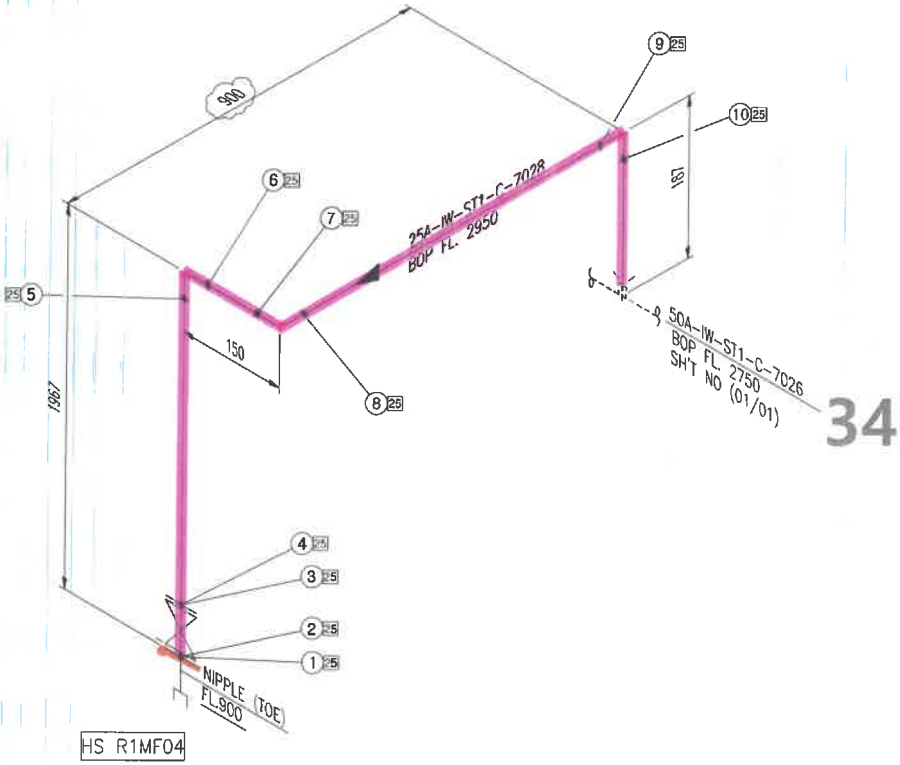

<NOTE>
1. (*) FIELD ADJUST

SK ecoplant

ITEM	SIZE	Q'TY	DESCRIPTION
		ST1	
P	25A	3.2M	PIPE, STS 304TP, ERW, PE - SCH 10S
NP1	25A	1EA	NIPPLE, STS 304TP, ERW, TOE - SCH 40S
E90	25A	3EA	ELBOW 90 DEG, STSF304, SW - SCH 10S
VG	25A	1EA	GATE VALVE, KS 10K, RF FLG'D, BODY-STSF304 /
			TRIM-STS304, BB / OS&Y, HANDWHEEL
F	25A	2EA	FLG SO, KS 10K, RF, STS304
G	25A	2EA	GASKET, KS 10K, RF, PTFE+EPDM, 3.0MM TH'K
B	25A	2SET	MACHINE BOLT & NUTS :STS 304 / W WASHERS
SOC	25A	1EA	QUICK COUPLING(MALE)
IN	25tX25A	3.2M	관 보온재(고무발포)

* PIPE : P/P1 * 90' ELBOW : E90 * 45' ELBOW : E45 * TEE : T * RED.TEE : TR * STUB-IN : STU * REINFORCING PAD : RP * CON.RED : RC * ECC.RED : RE * CON.SWAGE : RCS/RCS1 * ECC.SWAGE : RES/RES1 * NIPPLE : NP/NP1/NP2 * CAP : CAP/CAP1 * PLUG : PLG * FULL COUPLING : FC * HALF COUPLING : HF/HF1
* STUB-IN : STU * SOCKET(HDPE/PVC) : SC * SADDLE(HDPE) : SD * FLANGE : F/F1 * GASKET : G/G1/G2 * BOLT & NUT : B/B1 * BLIND FLANGE : FB/FB1 * GATE VA. : VG/VG1/VG2 * BALL VA. : VB/VBLO/VB1/VB1LO/VB2/VB2LO * BUTTERFLY VA. : VF/VF4 * CHECK VA. : VC/VC1/VC2/VC3/VC4/VC5/VC6/VC7
* GLOBE VA. : VL/VL1/VL2 * DIAPHRAGM VA. : VD/VDLO * DAMPER : VP * QUICK COUPLING : SQC * FLEXIBLE JOINT(STEEL) : FLXB * FLEXIBLE JOINT(RUBBER) : FLXR * FLEXIBLE JOINT(STEEL PTFE LINED) : FLXL * FLEXIBLE HOSE : FLXH * STEAM TRAP : ST * SPRAY NOZZLE : SPN * EMERGENCY SHOWER : SSH
* STRAINER(Y-TYPE) : YSTR * STRAINER(T-TYPE) : TSTR * STRAINER(BUCKET-TYPE) : BSTR * ANCHOR PLATE : STOP * BIRD SCREEN : BS * ISOLATION KIT : IK * UNLOADING BOX : UB * AIR TRAP : AT * LOTO : LOTO * SIGHT GLASS : SG * PRESSURE GAUGE : PG * SHIELD : SH * SPECIAL BOLT & NUT : BL/BL1

CLIENT SK hynix 16

INSULATION	CODE	C	CONDITION	PRESS. (kg/cm2g)	TEMP. (°C)
	THICK.	25	DESIGN	13.5	60
			OPERATING	10	AMB

AREA W14
UNIT R1MF
REF. PLAN DWG. CJ-M15W14-PI-A30-010018-C
REF. P & ID CJ-M15W13-PR-A20-000081

REV. NO.	DATE	DESCRIPTION	BY	CHK	APP'D
C	25.01.24	APPROVED FOR CONSTRUCTION	황래종	안남후	박동영

CONTRACTOR SK ecoplant
PROJECT NAME M15X Ph4 Project
COMMODITY IW
JOB NO. 22330D
LINE NO. 25A-IW-ST1-C-7028
SH'T NO. 01 / 01
REV. 0

경고 : 본 도면은 SK HYNIX의 기업비밀 자료로서, 어떠한 경우에도 목적 외 사용, 복제, 제3자에게 공개, 누설 및 유출할 수 없으며, 회사는 유포자의 불법 사용으로 피해가 발생할 경우 유포자에게 민/형사상 책임을 요구할 수 있음.

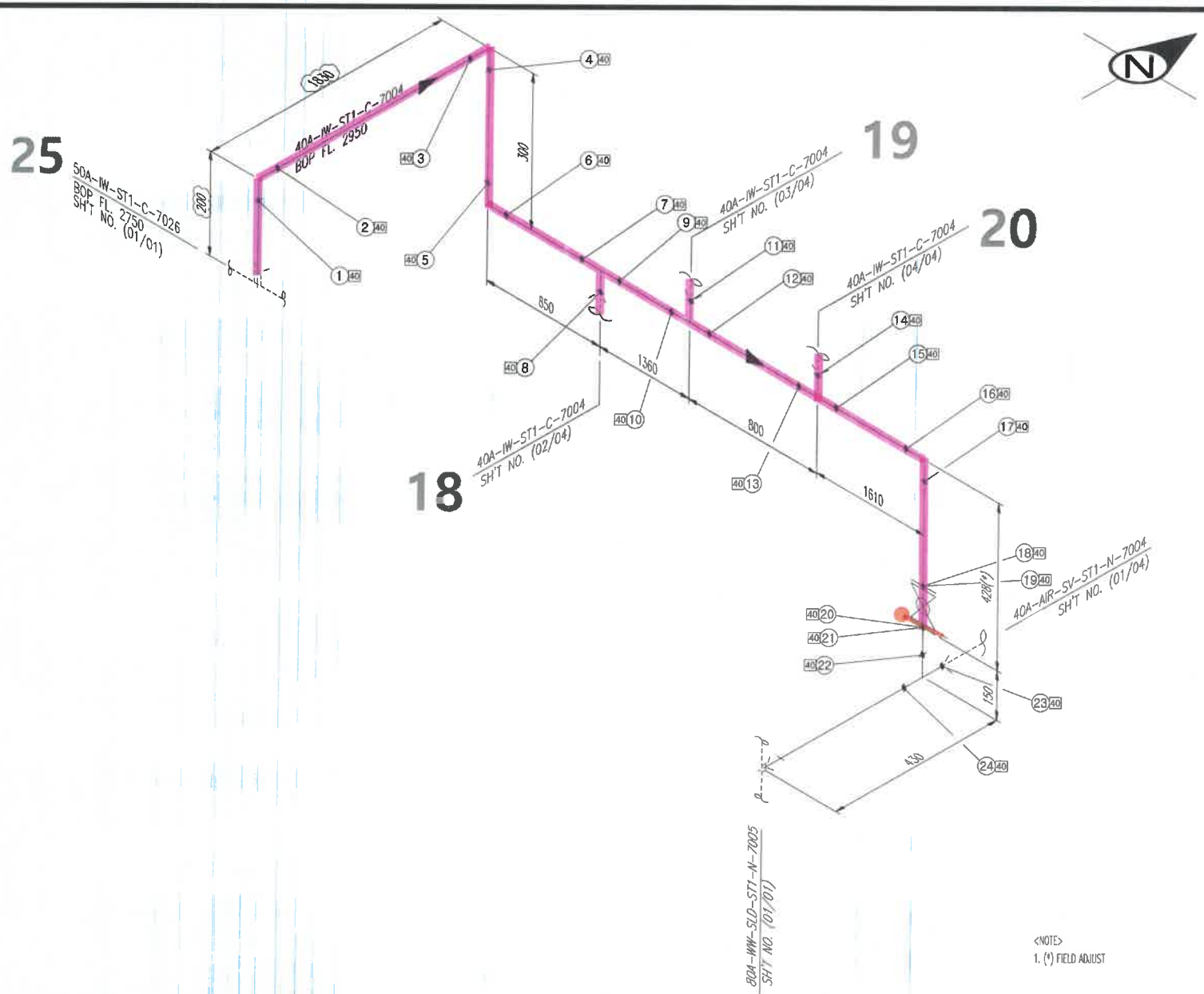

<NOTE>
1. (*) FIELD ADJUST

ITEM	SIZE	Q'TY	DESCRIPTION
		ST1	
P	40A	8.1M	PIPE, STS 304TP, ERW, PE – SCH 10S
E90	40A	4EA	ELBOW 90 DEG, STSF304, SW – SCH 10S
T	40A	4EA	TEE EQUAL, STSF304, SW – SCH 10S
VB	40A	1EA	BALL VALVE, KS 10K, RF FLG'D, BODY-STSF304 /
			TRIM-STS304 / SEAT-PTFE, FB, LEVER
F	40A	2EA	FLG SO, KS 10K, RF, STS304
G	40A	2EA	GASKET, KS 10K, RF, PTFE+EPDM, 3.0MM TH'K
B	40A	2SET	MACHINE BOLT & NUTS :STS 304 / W WASHERS
IN	25tX40A	8.1M	관 보온재(고무발포)

* PIPE : P/P1 * 90° ELBOW : E90 * 45° ELBOW : E45 * TEE : T * RED.TEE : TR * STUB-IN : STU * REINFORCING PAD : RP * CON.RED : RC * ECC.RED : RE * CON.SWAGE : RCS/RCS1 * ECC.SWAGE : RCS/RCS1 * NIPPLE : NP/NP1/NP2 * CAP : CAP/CAP1 * PLUG : PLG * FULL COUPLING : FC * HALF COUPLING : HF/HF1
* STUB-IN : STU * SOCKET(HDPE/PVC) : SC * SADDLE(HDPE) : SD * FLANGE : F/F1 * GASKET : G/G1/G2 * BOLT & NUT : B/B1 * BLIND FLANGE : FB/FB1 * GATE VA. : VG/VG1/VG2 * BALL VA. : VB/VBLO/VB1/VB1LO/VB2/VB2LO * BUTTERFLY VA. : VF/VF4 * CHECK VA. : VC/VC1/VC2/VC3/VC4/VC5/VC6/VC7
* GLOBE VA. : VL/VL1/VL2 * DIAPHRAGM VA. : VD/VDLO * DAMPER : VP * QUICK COUPLING : SQC * FLEXIBLE JOINT(STEEL) : FLXB * FLEXIBLE JOINT(RUBBER) : FLXR * FLEXIBLE JOINT(STEEL PTFE LINED) : FLXL * FLEXIBLE HOSE : FLXH * STEAM TRAP : ST * SPRAY NOZZLE : SPN * EMERGENCY SHOWER : SSH
* STRAINER(Y-TYPE) : YSTR * STRAINER(T-TYPE) : TSTR * STRAINER(BUCKET-TYPE) : BSTR * ANCHOR PLATE : STOP * BIRD SCREEN : BS * ISOLATION KIT : IK * UNLOADING BOX : UB * AIR TRAP : AT * LOTO : LOTO * SIGHT GLASS : SG * PRESSURE GAUGE : PG * SHIELD : SH * SPECIAL BOLT & NUT : BL/BL1

CLIENT SK hynix 17

INSULATION	CODE	C	CONDITION	PRESS. (kg/cm2g)	TEMP. (°C)
	THICK.	25	DESIGN	13.5	60
			OPERATING	10	AMB

AREA W14
UNIT R1MF
REF. PLAN DWG. CJ-M15W14-PI-A30-010018-C
REF. P & ID CJ-M15W14-PR-A20-000502

REV. NO.	DATE	DESCRIPTION	BY	CHK	APP'D
1	25.03.31	REVISED AS MARKED	황래종	안남후	박동영
0	25.01.24	APPROVED FOR CONSTRUCTION	황래종	안남후	박동영

CONTRACTOR SK ecoplant
PROJECT NAME M15X Ph4 Project
COMMODITY IW
JOB NO. 22330D
LINE NO. 40A-IW-ST1-C-7004
SH'T NO. 01 / 04 REV. 1

경고 : 본 도면은 SK HYNIX의 기업비밀 자료로서, 어떠한 경우에도 목적 외 사용, 복제, 제3자에게 공개, 누설 및 유출할 수 없으며, 회사는 유포자의 불법 사용으로 피해가 발생할 경우 유포자에게 민/형사상 책임을 요구할 수 있음.

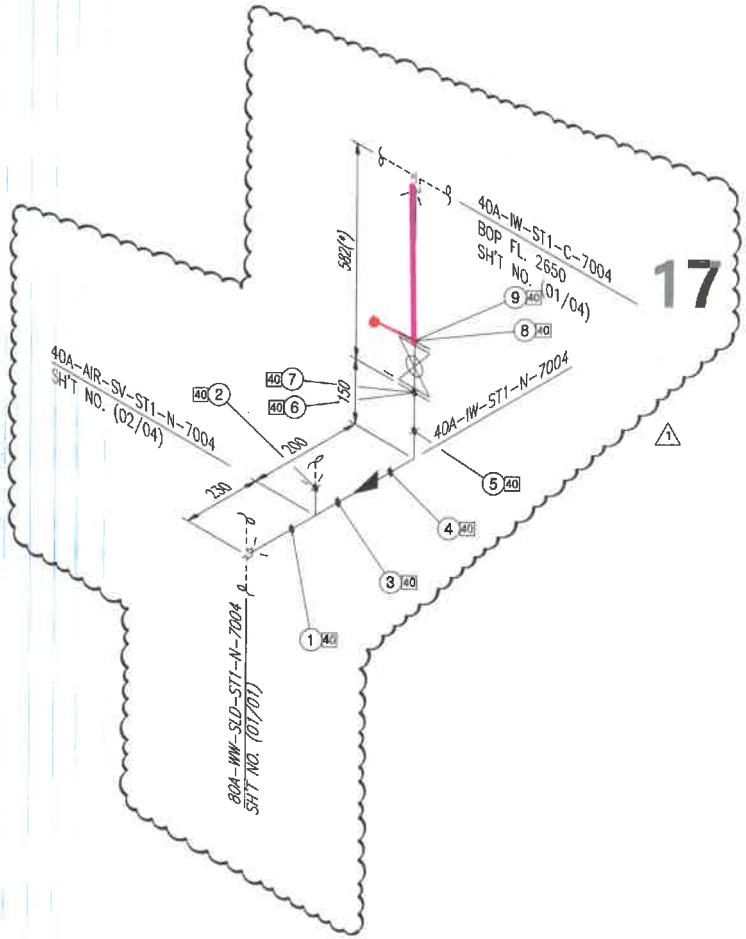

<NOTE>
1. (*) FIELD ADJUST

SK ecoplant

ITEM	SIZE	Q'TY	DESCRIPTION
		ST1	
P	40A	1.1M	PIPE, STS 304TP, ERW, PE - SCH 10S
E90	40A	1 EA	ELBOW 90 DEG, STSF304, SW - SCH 10S
T	40A	1EA	TEE EQUAL, STSF304, SW - SCH 10S
VB	40A	1EA	BALL VALVE, KS 10K, RF FLG'D, BODY-STSF304 /
			TRIM-STS304 / SEAT-PTFE, FB, LEVER
F	40A	2EA	FLG SO, KS 10K, RF, STS304
G	40A	2EA	GASKET, KS 10K, RF, PTFE+EPDM, 3.0MM TH'K
B	40A	2SET	MACHINE BOLT & NUTS :STS 304 / W WASHERS
IN	25tX40A	2.2M	관 보온재(고무발포)

* PIPE : P/P1 * 90° ELBOW : E90 * 45° ELBOW : E45 * TEE : T * RED.TEE : TR * STUB-IN : STU * REINFORCING PAD : RP * CON.RED : RC * ECC.RED : RE * CON.SWAGE : RCS/RCS1 * ECC.SWAGE : RES/RES1 * NIPPLE : NP/NP1/NP2 * CAP : CAP/CAP1 * PLUG : PLG * FULL COUPLING : FC * HALF COUPLING : HF/HF1
* STUB-IN : STU * SOCKET(HDPE/PVC) : SC * SADDLE(HDPE) : SD * FLANGE : F/F1 * GASKET : G/G1/G2 * BOLT & NUT : B/B1 * BLIND FLANGE : FB/FB1 * GATE VA. : VG/VG1/VG2 * BALL VA. : VB/VB1.O/VB1/VB1.LO/VB2/VB2.LO * BUTTERFLY VA. : VF/VF4 * CHECK VA. : VC/VC1/VC2/VC3/VC4/VC5/VC6/VC7
* GLOBE VA. : VL/VL1/VL2 * DIAPHRAGM VA. : VD/VD.LO * DAMPER : VP * QUICK COUPLING : SQC * FLEXIBLE JOINT(STEEL) : FLXB * FLEXIBLE JOINT(RUBBER) : FLXR * FLEXIBLE JOINT(STEEL PTFE LINED) : FLXL * FLEXIBLE HOSE : FLXH * STEAM TRAP : ST * SPRAY NOZZLE : SPN * EMERGENCY SHOWER : SSH
* STRAINER(Y-TYPE) : YSTR * STRAINER(T-TYPE) : TSTR * STRAINER(BUCKET-TYPE) : BSTR * ANCHOR PLATE : STOP * BIRD SCREEN : BS * ISOLATION KIT : IK * UNLOADING BOX : UB * AIR TRAP : AT * LOTO : LOTO * SIGHT GLASS : SG * PRESSURE GAUGE : PG * SHILED : SH * SPECIAL BOLT & NUT : BL/BL1

CLIENT SK hynix 18

INSULATION	CODE	C
	THICK.	25

CONDITION	PRESS. (kg/cm2g)	TEMP. (°C)
DESIGN	13.5	60
OPERATING	10	AMB

AREA W14
UNIT R1MF
REF. PLAN DWG. CJ-M15W14-PI-A30-010018-C
REF. P & ID CJ-M15W14-PR-A20-000502

REV. NO.	DATE	DESCRIPTION	BY	CHK	APP'D
1	25.03.31	REVISED AS MARKED	황래종	안남후	박종영
0	25.01.24	APPROVED FOR CONSTRUCTION	황래종	안남후	박종영

CONTRACTOR SK ecoplant
PROJECT NAME M15X Ph4 Project
COMMODITY IW
JOB NO. 22330D
LINE NO. 40A-IW-ST1-C-7004
SH'T NO. 02 / 04
REV. 1

경고 : 본 도면은 SK HYNIX의 기업비밀 자료로서, 어떠한 경우에도 목적 외 사용, 복제, 제3자에게 공개, 누설 및 유출할 수 없으며, 회사는 유포자의 불법 사용으로 피해가 발생할 경우 유포자에게 민/형사상 책임을 요구할 수 있음.

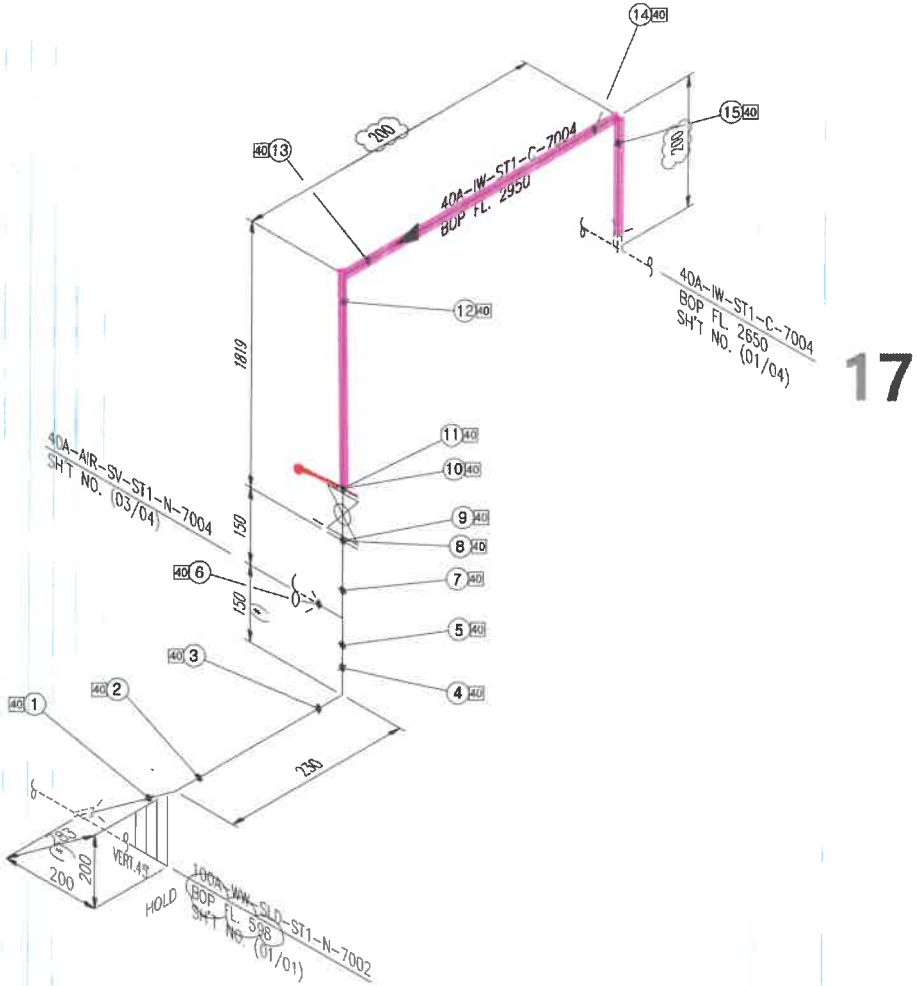

17

<NOTE>
1. (*) FIELD ADJUST

ITEM	SIZE	Q'TY	DESCRIPTION
		ST1	
P	40A	3.0M	PIPE, STS 304TP, ERW, PE – SCH 10S
E90	40A	4EA	ELBOW 90 DEG, STSF304, SW – SCH 10S
T	40A	1EA	TEE EQUAL, STSF304, SW – SCH 10S
VB	40A	1EA	BALL VELVE, KS 10K, RF FLG'D, BODY-STSF304 /
			TRIM-STS304 / SEAT-PTFE, FB, LEVER
F	40A	2EA	FLG 50, KS 10K, RF, STS304
G	40A	2EA	GASKET, KS 10K, RF, PTFE+EPDM, 3.0MM TH'K
B	40A	2SET	MACHINE BOLT & NUTS :STS 304 / W WASHERS
IN	25tX40A	3.0M	건 보온재(2무배후)

* PIPE : P/P1 * 90° ELBOW : E90 * 45° ELBOW : E45 * TEE : T * RED.TEE : TR * STUB-IN : STU * REINFORCING PAD : RP * CON.RED : RC * ECC.RED : RE * CON.SWAGE : RCS/RCS1 * ECC.SWAGE : RES/RES1 * NIPPLE : NP/NP1/NP2 * CAP : CAP/CAP1 * PLUG : PLG * FULL COUPLING : FC * HALF COUPLING : HF/HF1
* STUB-IN : STU * SOCKET(HDPE/PVC) : SC * SADDLE(HDPE) : SD * FLANGE : F/F1 * GASKET : G/G1/G2 * BOLT & NUT : B/B1 * BLIND FLANGE : FB/FB1 * GATE VA. : VG/VG1/VG2 * BALL VA. : VB/VBLO/VB1/VB1LO/VB2/VB2LO * BUTTERFLY VA. : VF/VF4 * CHECK VA. : VC/VC1/VC2/VC3/VC4/VC5/VC6/VC7
* GLOBE VA. : VL/VL1/VL2 * DIAPHRAGM VA. : VD/VDLO * DAMPER : VP * QUICK COUPLING : SQC * FLEXIBLE JOINT(STEEL) : FLXB * FLEXIBLE JOINT(RUBBER) : FLXR * FLEXIBLE JOINT(STEEL PTFE LINED) : FLXL * FLEXIBLE HOSE : FLXH * STEAM TRAP : ST * SPRAY NOZZLE : SPN * EMERGENCY SHOWER : SSH
* STRAINER(Y-TYPE) : YSTR * STRAINER(T-TYPE) : TSTR * STRAINER(BUCKET-TYPE) : BSTR * ANCHOR PLATE : STOP * BIRD SCREEN : BS * ISOLATION KIT : IK * UNLOADING BOX : UB * AIR TRAP : AT * LOTO : LOTO * SIGHT GLASS : SG * PRESSURE GAUGE : PG * SHIELD : SH * SPECIAL BOLT & NUT : BL/BL1

CLIENT SK hynix 19

INSULATION	CODE	C	CONDITION	PRESS. (kg/cm2g)	TEMP. (°C)
	THICK.	25	DESIGN	13.5	60
			OPERATING	10	AMB

AREA W14
UNIT R1MF
REF. PLAN DWG. CJ-M15W14-PI-A30-010018-C
REF. P & ID CJ-M15W14-PR-A20-000502

REV. NO.	DATE	DESCRIPTION	BY	CHK	APP'D
0	25.01.24	APPROVED FOR CONSTRUCTION	황래종	안남후	박동영

CONTRACTOR SK ecoplant
PROJECT NAME M15X Ph4 Project
COMMODITY IW
JOB NO. 22330D
LINE NO. 40A-IW-ST1-C-7004
SH'T NO. 03 / 04
REV. 0

경고 : 본 도면은 SK HYNIX의 기업비밀 자료로서, 어떠한 경우에도 독적 외 사용, 복제, 제3자에게 공개, 누설 및 유출할 수 없으며, 회사는 유포자의 불법 사용으로 피해가 발생할 경우 유포자에게 민/형사상 책임을 요구할 수 있음.

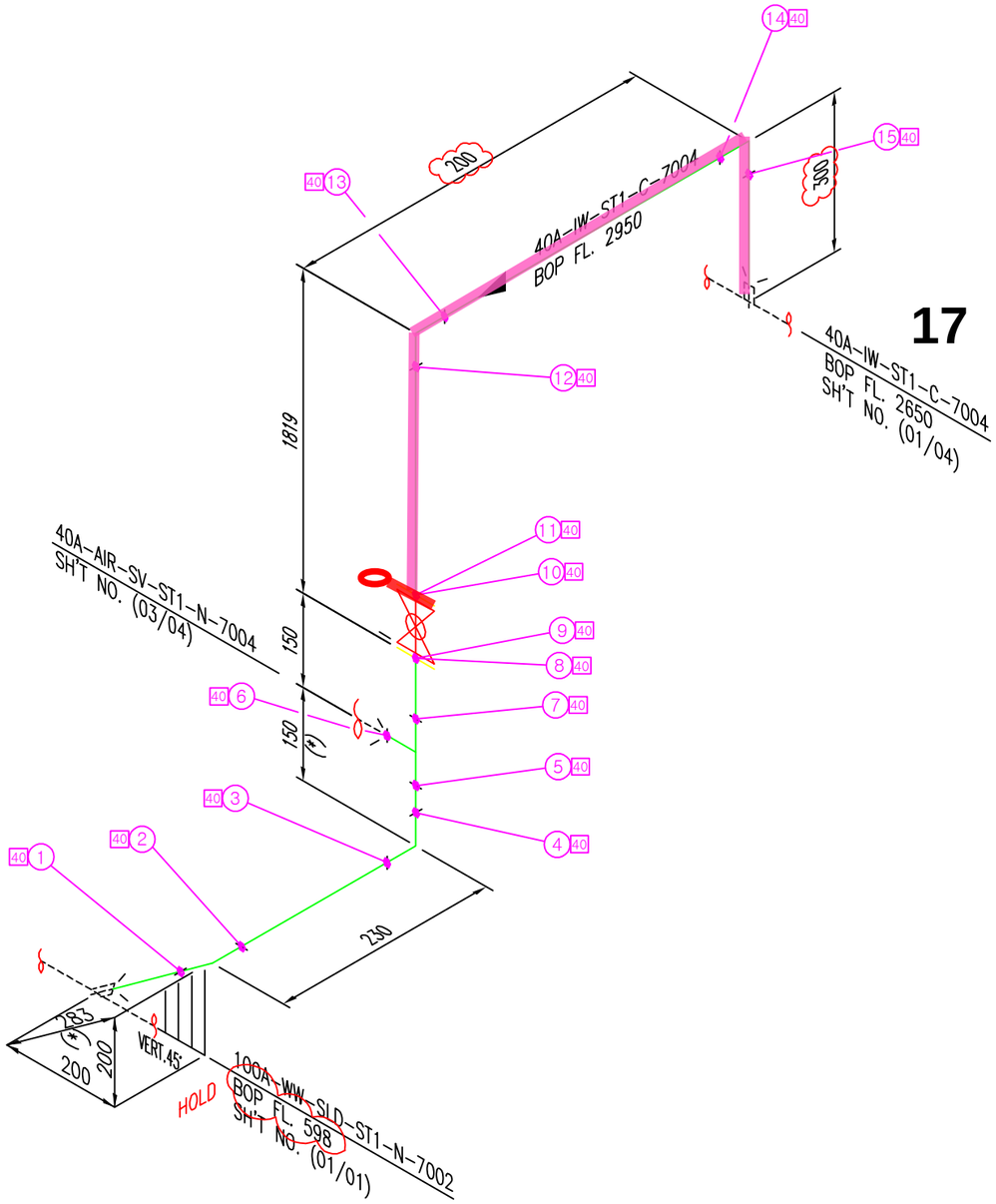

17

ITEM	SIZE	Q'TY	DESCRIPTION
		ST1	
P	40A	3.0M	PIPE, STS 304TP, ERW, PE – SCH 10S
E90	40A	4EA	ELBOW 90 DEG, STSF304, SW – SCH 10S
T	40A	1EA	TEE EQUAL, STSF304, SW – SCH 10S
VB	40A	1EA	BALL VALVE, KS 10K, RF FLG'D, BODY–STSF304 /
			TRIM–STS304 / SEAT–PTFE, FB, LEVER
F	40A	2EA	FLG SO, KS 10K, RF, STS304
G	40A	2EA	GASKET, KS 10K, RF, PTFE+EPDM, 3.0MM TH'K
B	40A	2SET	MACHINE BOLT & NUTS :STS 304 / W WASHERS
IN	25tX40A	3.0M	곤 보온재(고무발포)

<NOTE>
1. (*) FIELD ADJUST

* PIPE : P/P1 * 90° ELBOW : E90 * 45° ELBOW : E45 * TEE : T * RED.TEE : TR * STUB-IN : STU * REINFORCING PAD : RP * CON.RED : RC * ECC.RED : RE * CON.SWAGE : RCS/RCS1 * ECC.SWAGE : RES/RES1 * NIPPLE : NP/NP1/NP2 * CAP : CAP/CAP1 * PLUG : PLG * FULL COUPLING : FC * HALF COUPLING : HF/HF1
* STUB-IN : STU * SOCKET(HDPE/PVC) : SC * SADDLE(HDPE) : SD * FLANGE : F/F1 * GASKET : G/G1/G2 * BOLT & NUT : B/B1 * BLIND FLANGE : FB/FB1 * GATE VA. : VG/VG1/VG2 * BALL VA. : VB/VBLO/VB1/VB1LO/VB2/VB2LO * BUTTERFLY VA. : VF/VF4 * CHECK VA. : VC/VC1/VC2/VC3/VC4/VC5/VC6/VC7
* GLOBE VA. : VL/VL1/VL2 * DIAPHRAGM VA. : VD/VDLO * DAMPER : VP * QUICK COUPLING : SQC * FLEXIBLE JOINT(STEEL) : FLXB * FLEXIBLE JOINT(RUBBER) : FLXR * FLEXIBLE JOINT(STEEL_PTFE LINED) : FLXL * FLEXIBLE HOSE : FLXH * STEAM TRAP : ST * SPRAY NOZZLE : SPN * EMERGENCY SHOWER : SSH
* STRAINER(Y-TYPE) : YSTR * STRAINER(T-TYPE) : TSTR * STRAINER(BUCKET-TYPE) : BSTR * ANCHOR PLATE : STOP * BIRD SCREEN : BS * ISOLATION KIT : IK * UNLOADING BOX : UB * AIR TRAP : AT * LOTO : LOTO * SIGHT GLASS : SG * PRESSURE GAUGE : PG * SHILED : SH * SPECIAL BOLT & NUT : BL/BL1

CLIENT: SK hynix

19

INSULATION	CODE	C	CONDITION	PRESS. (kg/cm2g)	TEMP. (°C)
	THICK.	25	DESIGN	13.5	60
			OPERATING	10	AMB

AREA: W14
UNIT: R1MF
REF. PLAN DWG.: CJ-M15W14-PI-A30-010018-C
REF. P. & ID: CJ-M15W14-PR-A20-000502

REV. NO.	DATE	DESCRIPTION	BY	CHK	APP'D
0	25.01.24	APPROVED FOR CONSTRUCTION	황래종	안남후	박동영

CONTRACTOR: SK ecoplant
COMMODITY: IW
LINE NO.: 40A-IW-ST1-C-7004
PROJECT NAME: M15X Ph4 Project
JOB NO.: 22330D
SH'T NO.: 03 / 04
REV.: 0

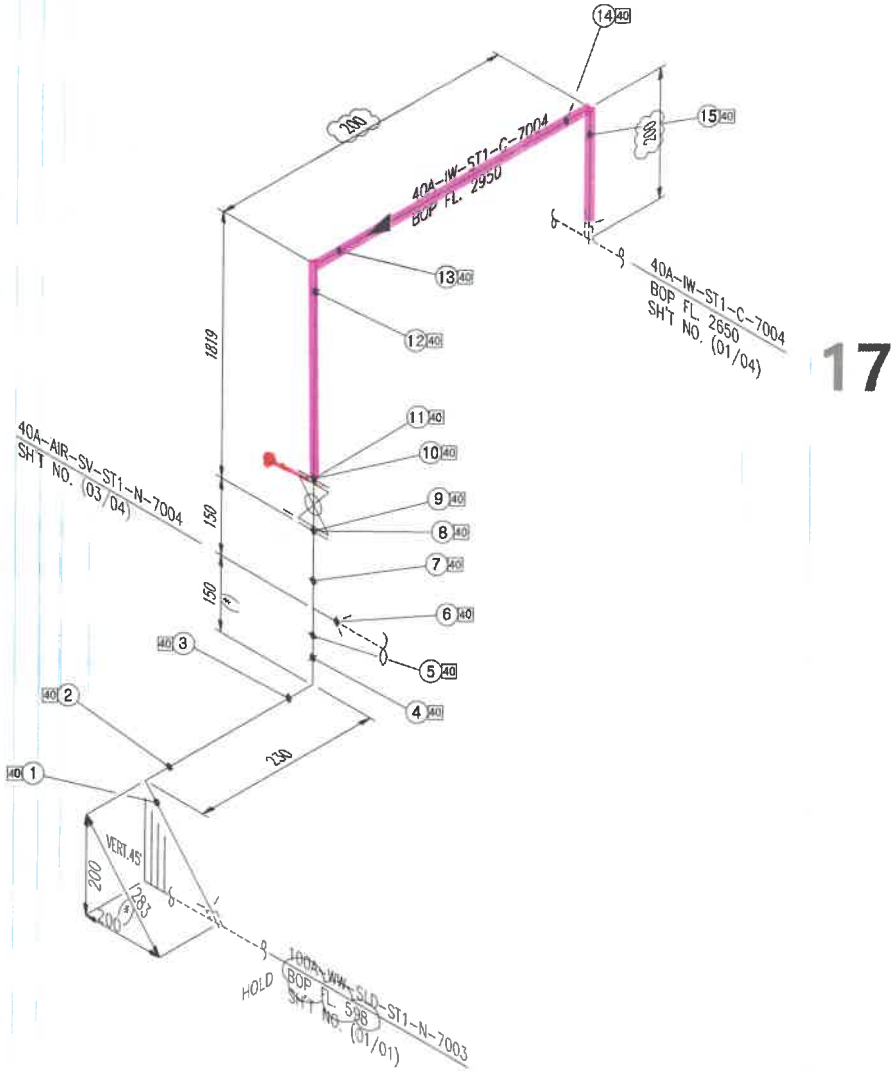

17

<NOTE>
1. (*) FIELD ADJUST

SK ecoplant

ITEM	SIZE	Q'TY	DESCRIPTION
		ST1	
P	40A	3.0M	PIPE, STS 304TP, ERW, PE - SCH 10S
E90	40A	4EA	ELBOW 90 DEG, STSF304, SW - SCH 10S
T	40A	1EA	TEE EQUAL, STSF304, SW - SCH 10S
VB	40A	1EA	BALL VALVE, KS 10K, RF FLG'D, BODY-STSF304 /
			TRIM-STS304 / SEAT-PTFE, FB, LEVER
F	40A	2EA	FLG SO, KS 10K, RF, STS304
G	40A	2EA	GASKET, KS 10K, RF, PTFE+EPDM, 3.0MM TH'K
B	40A	2SET	MACHINE BOLT & NUTS :STS 304 / W WASHERS
IN	25tX40A	3.3M	관 보온재(2무봉보)

* PIPE : P/P1 * 90' ELBOW : E90 * 45' ELBOW : E45 * TEE : T * RED.TEE : TR * STUB-IN : STU * REINFORCING PAD : RP * CON.RED : RC * ECC.RED : RE * CON.SWAGE : RCS/RCS1 * ECC.SWAGE : RES/RES1 * NIPPLE : NP/NP1/NP2 * CAP : CAP/CAP1 * PLUG : PLG * FULL COUPLING : FC * HALF COUPLING : HF/HF1
* STUB-IN : STU * SOCKET(HDPE/PVC) : SC * SADDLE(HDPE) : SD * FLANGE : F/F1 * GASKET : G/G1/G2 * BOLT & NUT : B/B1 * BLIND FLANGE : FB/FB1 * GATE VA : VG/VG1/VG2 * BALL VA : VB/VBLO/VB1/VB1LO/VB2/VB2LO * BUTTERFLY VA : VF/VF4 * CHECK VA : VC/VC1/VC2/VC3/VC4/VC5/VC6/VC7
* GLOBE VA : VL/VL1/VL2 * DIAPHRAGM VA : VD/VDLO * DAMPER : VP * QUICK COUPLING : SQC * FLEXIBLE JOINT(STEEL) : FLXB * FLEXIBLE JOINT(RUBBER) : FLXR * FLEXIBLE JOINT(STEEL PTFE LINED) : FLXL * FLEXIBLE HOSE : FLXH * STEAM TRAP : ST * SPRAY NOZZLE : SPN * EMERGENCY SHOWER : SSH
* STRAINER(Y-TYPE) : YSTR * STRAINER(T-TYPE) : TSTR * STRAINER(BUCKET-TYPE) : BSTR * ANCHOR PLATE : STOP * BIRD SCREEN : BS * ISOLATION KIT : IK * UNLOADING BOX : UB * AIR TRAP : AT * LOTO : LOTO * SIGHT GLASS : SG * PRESSURE GAUGE : PG * SHIELD : SH * SPECIAL BOLT & NUT : BL/BL1

CLIENT SK hynix 20

INSULATION	CODE	C	CONDITION	PRESS. (kg/cm2g)	TEMP. (°C)
	THICK.	25	DESIGN	13.5	60
			OPERATING	10	AMB

AREA W14
UNIT R1MF
REF. PLAN DWG. CJ-M15W14-PI-A30-010018-C
REF. P & ID CJ-M15W14-PR-A20-000502

REV. NO.	DATE	DESCRIPTION	BY	CHK	APP'D
0	25.01.24	APPROVED FOR CONSTRUCTION	황래원	안날우	박종영

CONTRACTOR SK ecoplant
PROJECT NAME M15X Ph4 Project
COMMODITY IW
JOB NO. 22330D
LINE NO. 40A-IW-ST1-C-7004
SH'T NO. 04 / 04
REV. 0

경고 : 본 도면은 SK HYNIX의 기업비밀 자료로서, 어떠한 경우에도 목적 외 사용, 복제, 제3자에게 공개, 누설 및 유출할 수 없으며, 회사는 유포자의 불법 사용으로 피해가 발생할 경우 유포자에게 민/형사상 책임을 요구할 수 있음.

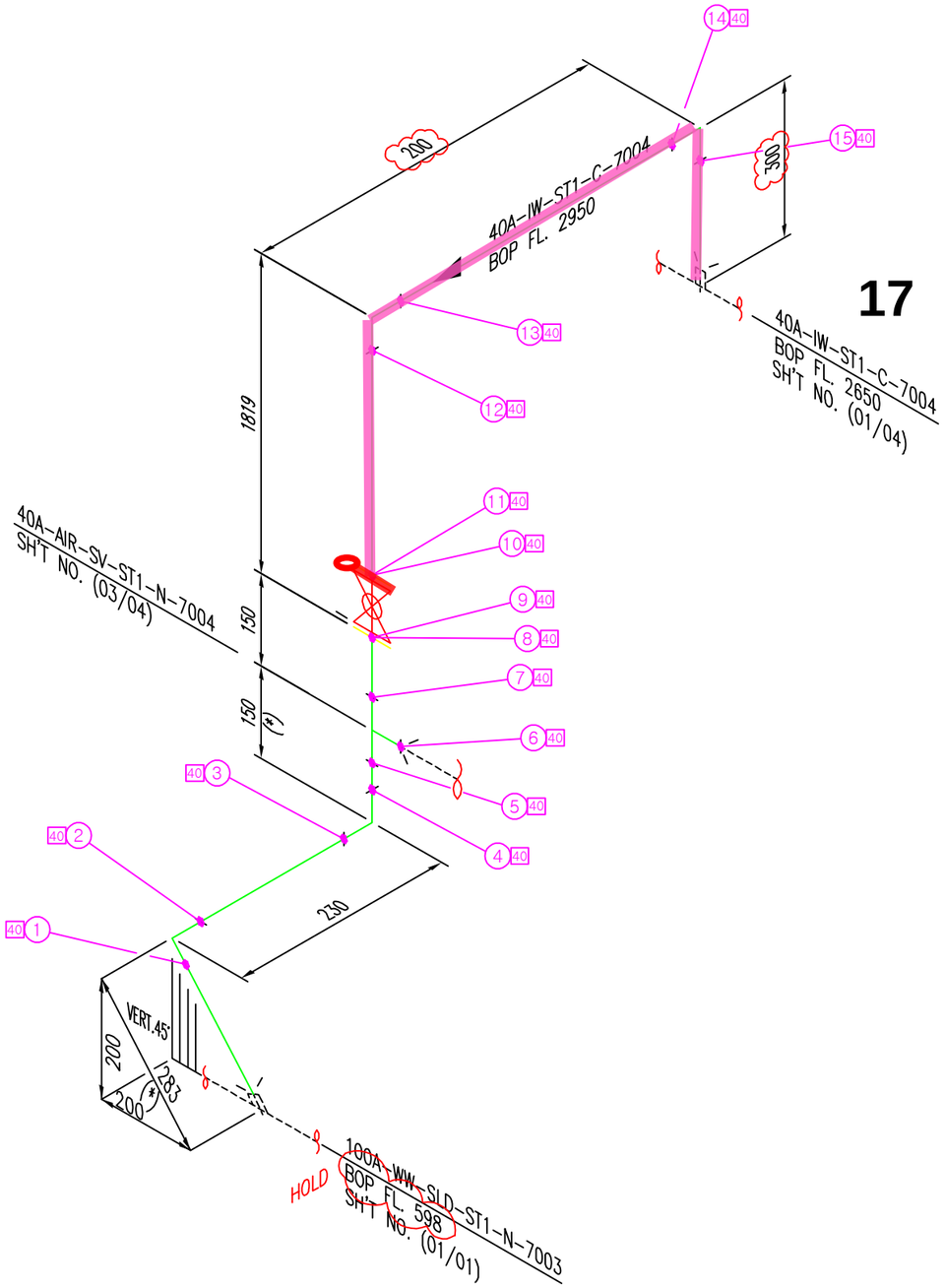

<NOTE>
1. (*) FIELD ADJUST

ITEM	SIZE	Q'TY	DESCRIPTION
		ST1	
P	40A	3.0M	PIPE, STS 304TP, ERW, PE – SCH 10S
E90	40A	4EA	ELBOW 90 DEG, STSF304, SW – SCH 10S
T	40A	1EA	TEE EQUAL, STSF304, SW – SCH 10S
VB	40A	1EA	BALL VALVE, KS 10K, RF FLG'D, BODY–STSF304 /
			TRIM–STS304 / SEAT–PTFE, FB, LEVER
F	40A	2EA	FLG SO, KS 10K, RF, STS304
G	40A	2EA	GASKET, KS 10K, RF, PTFE+EPDM, 3.0MM TH'K
B	40A	2SET	MACHINE BOLT & NUTS :STS 304 / W WASHERS
IN	25tX40A	3.3M	관 보온재(고무발포)

* PIPE : P/P1 * 90° ELBOW : E90 * 45° ELBOW : E45 * TEE : T * RED.TEE : TR * STUB-IN : STU * REINFORCING PAD : RP * CON.RED : RC * ECC.RED : RE * CON.SWAGE : RCS/RCS1 * ECC.SWAGE : RES/RES1 * NIPPLE : NP/NP1/NP2 * CAP : CAP/CAP1 * PLUG : PLG * FULL COUPLING : FC * HALF COUPLING : HF/HF1
* STUB-IN : STU * SOCKET(HDPE/PVC) : SC * SADDLE(HDPE) : SD * FLANGE : F/F1 * GASKET : G/G1/G2 * BOLT & NUT : B/B1 * BLIND FLANGE : FB/FB1 * GATE VA. : VG/VG1/VG2 * BALL VA. : VB/VBLO/VB1/VB1LO/VB2/VB2LO * BUTTERFLY VA. : VF/VF4 * CHECK VA. : VC/VC1/VC2/VC3/VC4/VC5/VC6/VC7
* GLOBE VA. : VL/VL1/VL2 * DIAPHRAGM VA. : VD/VDLO * DAMPER : VP * QUICK COUPLING : SQC * FLEXIBLE JOINT(STEEL) : FLXB * FLEXIBLE JOINT(RUBBER) : FLXR * FLEXIBLE JOINT(STEEL_PTFE LINED) : FLXL * FLEXIBLE HOSE : FLXH * STEAM TRAP : ST * SPRAY NOZZLE : SPN * EMERGENCY SHOWER : SSH
* STRAINER(Y-TYPE) : YSTR * STRAINER(T-TYPE) : TSTR * STRAINER(BUCKET-TYPE) : BSTR * ANCHOR PLATE : STOP * BIRD SCREEN : BS * ISOLATION KIT : IK * UNLOADING BOX : UB * AIR TRAP : AT * LOTO : LOTO * SIGHT GLASS : SG * PRESSURE GAUGE : PG * SHILED : SH * SPECIAL BOLT & NUT : BL/BL1

CLIENT: SK hynix

20

INSULATION	CODE	C	CONDITION	PRESS. (kg/cm2g)	TEMP. (°C)
	THICK.	25	DESIGN	13.5	60
			OPERATING	10	AMB

AREA: W14
UNIT: R1MF
REF. PLAN DWG.: CJ-M15W14-PI-A30-010018-C
REF. P & ID: CJ-M15W14-PR-A20-000502

REV. NO.	DATE	DESCRIPTION	BY	CHK	APP'D
0	25.01.24	APPROVED FOR CONSTRUCTION	황래중	안남후	박동영

CONTRACTOR: SK ecoplant
COMMODITY: IW
LINE NO.: 40A-IW-ST1-C-7004
PROJECT NAME: M15X Ph4 Project
JOB NO.: 22330D
SH'T NO.: 04 / 04
REV.: 0

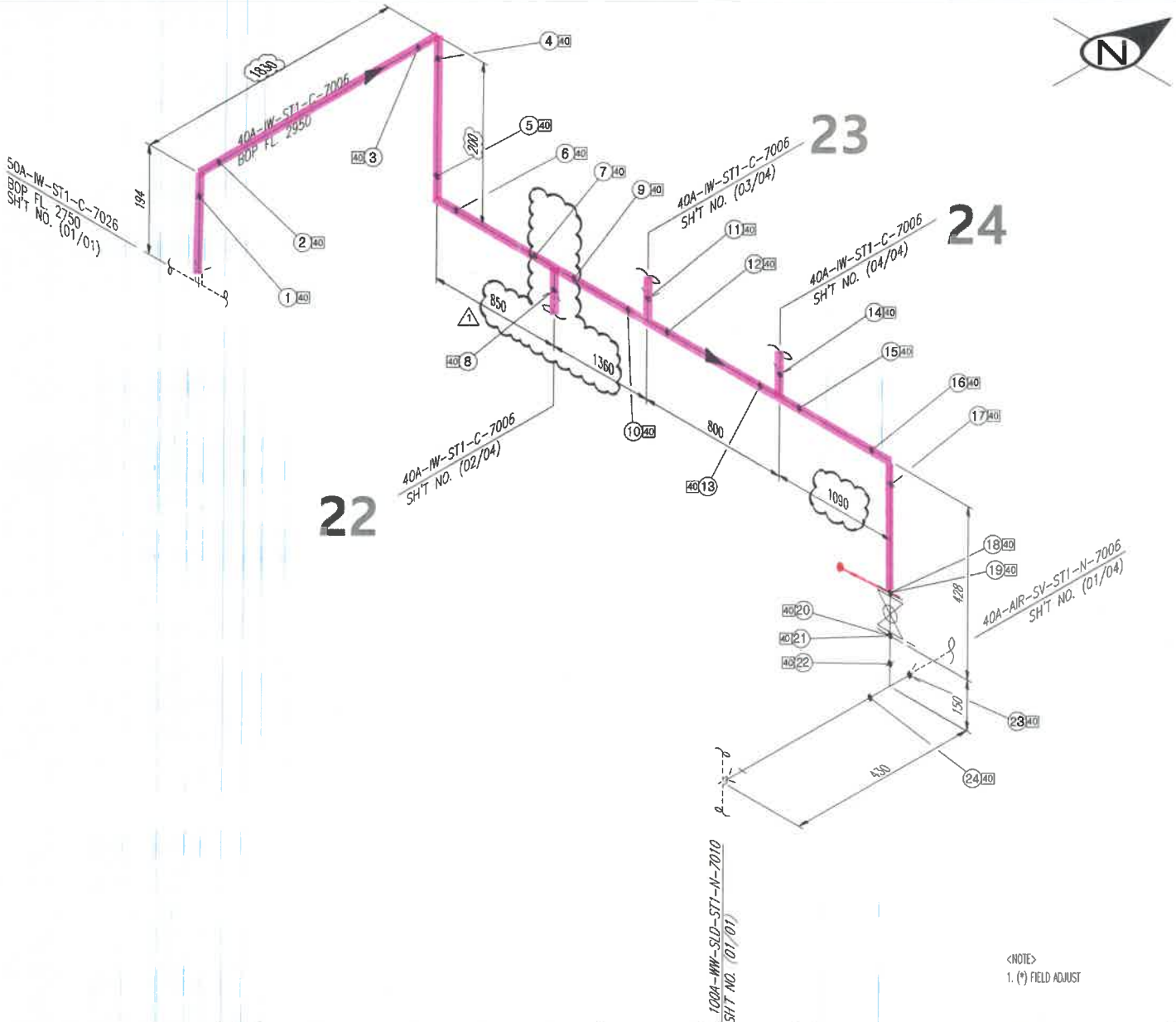

<NOTE>
1. (*) FIELD ADJUST

SK ecoplant

ITEM	SIZE	Q'TY	DESCRIPTION
		ST1	
P	40A	8.1M	PIPE, STS 304TP, ERW, PE – SCH 10S
E90	40A	4EA	ELBOW 90 DEG, STSF304, SW – SCH 10S
T	40A	4EA	TEE EQUAL, STSF304, SW – SCH 10S
VB	40A	1EA	BALL VALVE, KS 10K, RF FLG'D, BODY-STSF304 /
			TRIM-STS304 / SEAT-PTFE, FB, LEVER
F	40A	2EA	FLG SO, KS 10K, RF, STS304
G	40A	2EA	GASKET, KS 10K, RF, PTFE+EPDM, 3.0MM TH'K
B	40A	2SET	MACHINE BOLT & NUTS :STS 304 / W WASHERS
IN	25IX40A	8.1M	곤 보온재(고무발포)

* PIPE : P/P1 * 90' ELBOW : E90 * 45' ELBOW : E45 * TEE : T * RED.TEE : TR * STUB-IN : STU * REINFORCING PAD : RP * CON.RED : RC * ECC.RED : RE * CON.SWAGE : RCS/RCS1 * ECC.SWAGE : RES/RES1 * NIPPLE : NP/NP1/NP2 * CAP : CAP/CAP1 * PLUG : PLG * FULL COUPLING : FC * HALF COUPLING : HF/HF1
* STUB-IN : STU * SOCKET(HDPE/PVC) : SC * SADDLE(HDPE) : SD * FLANGE : F/F1 * GASKET : G/G1/G2 * BOLT & NUT : B/B1 * BLIND FLANGE : FB/FB1 * GATE VA. : VG/VG1/VG2 * BALL VA. : VB/VBLO/VB1/VB1LO/VB2/VB2LO * BUTTERFLY VA. : VF/VF4 * CHECK VA. : VC/VC1/VC2/VC3/VC4/VC5/VC6/VC7
* GLOBE VA. : VL/VL1/VL2 * DIAPHRAGM VA. : VD/VDLO * DAMPER : VP * QUICK COUPLING : SQC * FLEXIBLE JOINT(STEEL) : FLXB * FLEXIBLE JOINT(RUBBER) : FLXR * FLEXIBLE JOINT(STEEL_PTFE LINED) : FLXL * FLEXIBLE HOSE : FLXH * STEAM TRAP : ST * SPRAY NOZZLE : SPN * EMERGENCY SHOWER : SSH
* STRAINER(Y-TYPE) : YSTR * STRAINER(T-TYPE) : TSTR * STRAINER(BUCKET-TYPE) : BSTR * ANCHOR PLATE : STOP * BIRD SCREEN : BS * ISOLATION KIT : IK * UNLOADING BOX : UB * AIR TRAP : AT * LOTO : LOTO * SIGHT GLASS : SG * PRESSURE GAUGE : PG * SHILED : SH * SPECIAL BOLT & NUT : BL/BL1

CLIENT SK hynix 21

INSULATION	CODE	C	CONDITION	PRESS. (kg/cm2g)	TEMP. (°C)
	THICK.	25	DESIGN	13.5	60
			OPERATING	10	AMB

AREA W14
UNIT R1MF
REF. PLAN DWG. CJ-M15W14-PI-A30-010018-C
REF. P & ID CJ-M15W14-PR-A20-000503

REV. NO.	DATE	DESCRIPTION	BY	CHK	APP'D
1	25.03.31	REVISED AS MARKED	황래종	안남후	박종영
0	25.01.24	APPROVED FOR CONSTRUCTION	황래종	안남후	박종영

CONTRACTOR SK ecoplant
PROJECT NAME M15X Ph4 Project
COMMODITY IW
JOB NO. 22330D
LINE NO. 40A-IW-ST1-C-7006
SH'T NO. 01 / 04
REV. 1

경고 : 본 도면은 SK HYNIX의 기업비밀 자료로서, 어떠한 경우에도 목적 외 사용, 복제, 제3자에게 공개, 누설 및 유출할 수 없으며, 회사는 유포자의 불법 사용으로 피해가 발생할 경우 유포자에게 민/형사상 책임을 요구할 수 있음.

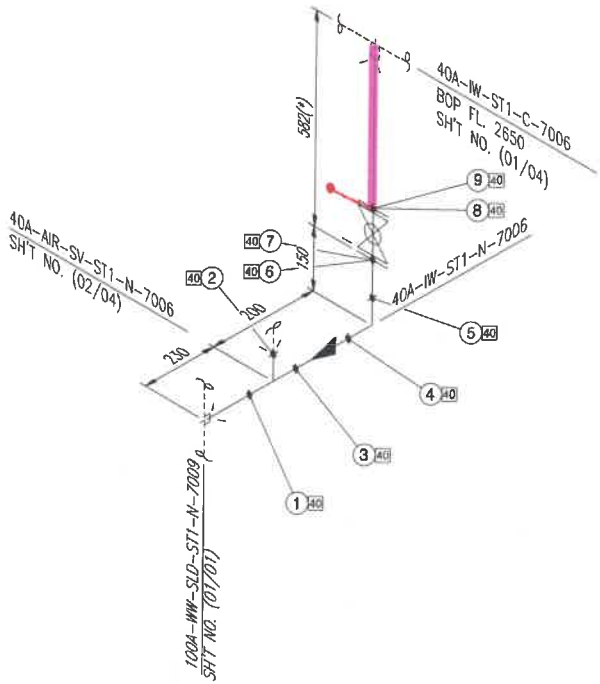

21

N

SK ecoplant

ITEM	SIZE	Q'TY	DESCRIPTION
		ST1	
P	40A	1.1M	PIPE, STS 304TP, ERW, PE - SCH 10S
E90	40A	1EA	ELBOW 90 DEG, STSF304, SW - SCH 10S
T	40A	1EA	TEE EQUAL, STSF304, SW - SCH 10S
VB	40A	1EA	BALL VALVE, KS 10K, RF FLG'D, BODY-STSF304 /
			TRIM-STS304 / SEAT-PTFE, FB, LEVER
F	40A	2EA	FLG SO, KS 10K, RF, STS304
G	40A	2EA	GASKET, KS 10K, RF, PTFE+EPDM, 3.0MM TH'K
B	40A	2SET	MACHINE BOLT & NUTS :STS 304 / W WASHERS
IN	25IX40A	1.1M	관 보온재(2두께보)

<NOTE>
1. (*) FIELD ADJUST

* PIPE : P/P1 * 90° ELBOW : E90 * 45° ELBOW : E45 * TEE : T * RED.TEE : TR * STUB-IN : STU * REINFORCING PAD : RP * CON.RED : RC * ECC.RED : RE * CON.SWAGE : RCS/RCS1 * ECC.SWAGE : RES/RES1 * NIPPLE : NP/NP1/NP2 * CAP : CAP/CAP1 * PLUG : PLG * FULL COUPLING : FC * HALF COUPLING : HF/HF1
* STUB-IN : STU * SOCKET(HDPE/PVC) : SC * SADDLE(HDPE) : SD * FLANGE : F/F1 * GASKET : G/G1/G2 * BOLT & NUT : B/B1 * BLIND FLANGE : FB/FB1 * GATE VA. : VG/VG1/VG2 * BALL VA. : VB/VBLO/VB1/VB1LO/VB2/VB2LO * BUTTERFLY VA. : VF/VF4 * CHECK VA. : VC/VC1/VC2/VC3/VC4/VC5/VC6/VC7
* GLOBE VA. : VL/VL1/VL2 * DIAPHRAGM VA. : VD/VDLO * DAMPER : VP * QUICK COUPLING : SQC * FLEXIBLE JOINT(STEEL) : FLXB * FLEXIBLE JOINT(RUBBER) : FLXR * FLEXIBLE JOINT(STEEL PTFE LINED) : FLXL * FLEXIBLE HOSE : FLXH * STEAM TRAP : ST * SPRAY NOZZLE : SPN * EMERGENCY SHOWER : SSH
* STRAINER(Y-TYPE) : YSTR * STRAINER(T-TYPE) : TSTR * STRAINER(BUCKET-TYPE) : BSTR * ANCHOR PLATE : STOP * BIRD SCREEN : BS * ISOLATION KIT : IK * UNLOADING BOX : UB * AIR TRAP : AT * LOTO : LOTO * SIGHT GLASS : SG * PRESSURE GAUGE : PG * SHIELD : SH * SPECIAL BOLT & NUT : BL/BL1

CLIENT SK hynix 22

INSULATION	CODE	C	CONDITION	PRESS. (kg/cm2g)	TEMP. (°C)
	THICK.	25	DESIGN	13.5	60
			OPERATING	10	AMB

AREA W14
UNIT R1MF
REF. PLAN DWG. CJ-M15W14-PI-A30-010018-C
REF. P & ID CJ-M15W14-PR-A20-000503

REV. NO.	DATE	DESCRIPTION	BY	CHK	APP'D
1	25.03.31	REVISED AS MARKED	황래종	안남후	박동영
0	25.01.24	APPROVED FOR CONSTRUCTION	황래종	안남후	박동영

CONTRACTOR SK ecoplant
PROJECT NAME M15X Ph4 Project
COMMODITY IW
JOB NO. 22330D
LINE NO. 40A-IW-ST1-C-7006
SH'T NO. 02 / 04 REV. 1

경고 : 본 도면은 SK HYNIX의 기업비밀 자료로서, 어떠한 경우에도 목적 외 사용, 복제, 제3자에게 공개, 누설 및 유출할 수 없으며, 회사는 유포자의 불법 사용으로 피해가 발생할 경우 유포자에게 민/형사상 책임을 요구할 수 있음.

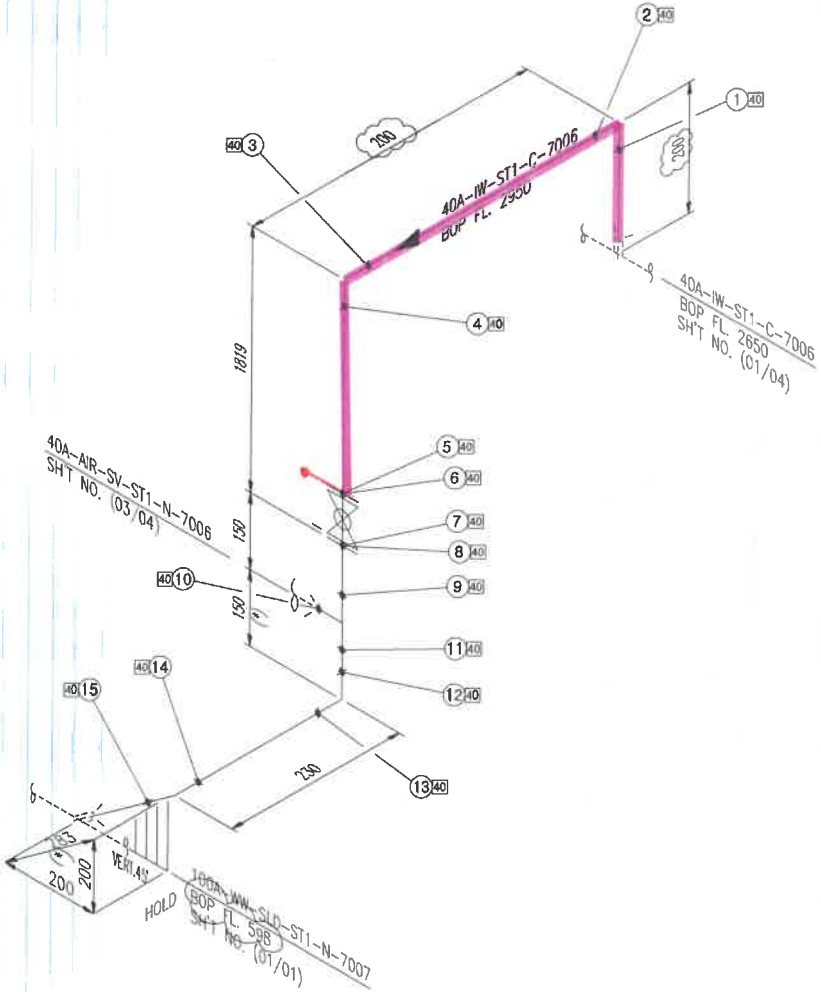

21

<NOTE>
1. (*) FIELD ADJUST

SK ecoplant

ITEM	SIZE	Q'TY	DESCRIPTION
		ST1	
P	40A	3.0M	PIPE, STS 304TP, ERW, PE – SCH 10S
E90	40A	4EA	ELBOW 90 DEG, STSF304, SW – SCH 10S
T	40A	1EA	TEE EQUAL, STSF304, SW – SCH 10S
VB	40A	1EA	BALL VALVE, KS 10K, RF FLG'D, BODY-STSF304 /
			TRIM-STS304 / SEAT-PTFE, FB, LEVER
F	40A	2EA	FLG SO, KS 10K, RF, STS304
G	40A	2EA	GASKET, KS 10K, RF, PTFE+EPDM, 3.0MM TH'K
B	40A	2SET	MACHINE BOLT & NUTS :STS 304 / W WASHERS
IN	25tX40A	3.0M	관 보온재(그무벨브)

* PIPE : P/P1 * 90° ELBOW : E90 * 45° ELBOW : E45 * TEE : T * RED.TEE : TR * STUB-IN : STU * REINFORCING PAD : RP * CONI.RED : RC * ECC.RED : RE * CON.SWAGE : RCS/RCS1 * ECC.SWAGE : RES/RES1 * NIPPLE : NP/NP1/NP2 * CAP : CAP/CAP1 * PLUG : PLG * FULL COUPLING : FC * HALF COUPLING : HF/HF1
* STUB-IN : STU * SOCKET(HDPE/PVC) : SC * SADDLE(HDPE) : SD * FLANGE : F/F1 * GASKET : G/G1/G2 * BOLT & NUT : B/B1 * BLIND FLANGE : FB/FB1 * GATE VA. : VG/VG1/VG2 * BALL VA. : VB/VBLO/VB1/VB1LO/VB2/VB2LO * BUTTERFLY VA. : VF/VF4 * CHECK VA. : VC/VC1/VC2/VC3/VC4/VC5/VC6/VC7
* GLOBE VA. : VL/VL1/VL2 * DIAPHIRAGM VA. : VD/VDLO * DAMPER : VP * QUICK COUPLING : SQC * FLEXIBLE JOINT(STEEL) : FLXB * FLEXIBLE JOINT(RUBBER) : FLXR * FLEXIBLE JOINT(STEEL PTFE LINED) : FLXL * FLEXIBLE HOSE : FLXH * STEAM TRAP : ST * SPRAY NOZZLE : SPN * EMERGENCY SHOWER : SSH
* STRAINER(Y-TYPE) : YSTR * STRAINER(T-TYPE) : TSTR * STRAINER(BUCKET-TYPE) : BSTR * ANCHOR PLATE : STOP * BIRD SCREEN : BS * ISOLATION KIT : IK * UNLOADING BOX : UB * AIR TRAP : AT * LOTO : LOTO * SIGHT GLASS : SG * PRESSURE GAUGE : PG * SHILED : SH * SPECIAL BOLT & NUT : BL/BL1

CLIENT SK hynix 23

INSULATION	CODE	C	CONDITION	PRESS. (kg/cm2g)	TEMP. (°C)
	THICK.	25	DESIGN	13.5	60
			OPERATING	10	AMB

AREA W14
UNIT R1MF
REF. PLAN DWG. CJ-M15W14-PI-A30-010018-C
REF. P & ID CJ-M15W14-PR-A20-000503

REV. NO.	DATE	DESCRIPTION	BY	CHK	APP'D
0	25.01.24	APPROVED FOR CONSTRUCTION	황례종	안날후	박동영

CONTRACTOR SK ecoplant
PROJECT NAME M15X Ph4 Project
COMMODITY IW
JOB NO. 22330D
LINE NO. 40A-IW-ST1-C-7006
SH'T NO. 03 / 04
REV. 0

경고 : 본 도면은 SK HYNIX의 기업비밀 자료로서, 어떠한 경우에도 목적 외 사용, 복제, 제3자에게 공개, 누설 및 유출할 수 없으며, 회사는 유포자의 불법 사용으로 피해가 발생할 경우 유포자에게 민/형사상 책임을 요구할 수 있음.

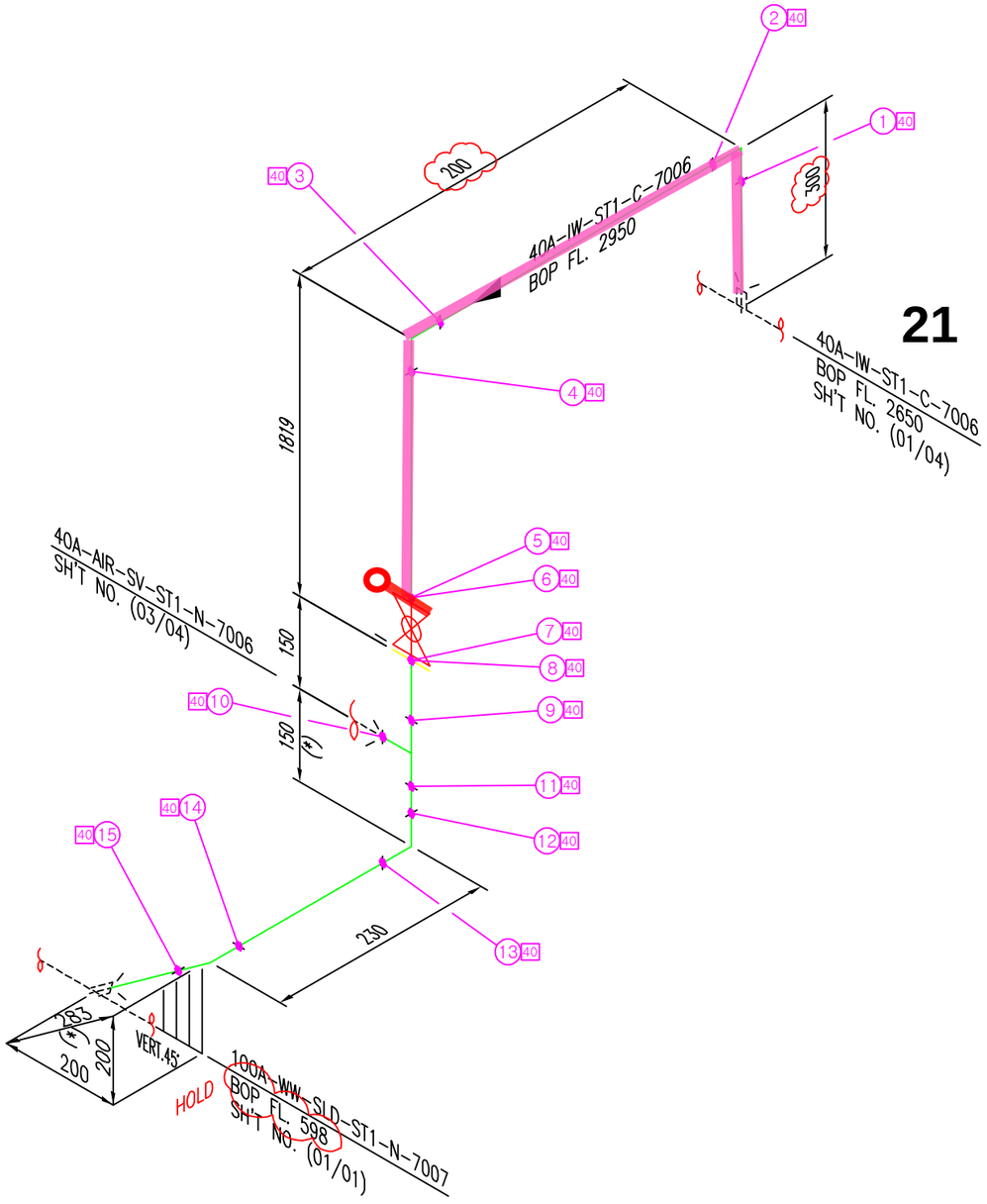

21

<NOTE>
1. (*) FIELD ADJUST

ITEM	SIZE	Q'TY	DESCRIPTION
		ST1	
P	40A	3.0M	PIPE, STS 304TP, ERW, PE - SCH 10S
E90	40A	4EA	ELBOW 90 DEG, STSF304, SW - SCH 10S
T	40A	1EA	TEE EQUAL, STSF304, SW - SCH 10S
VB	40A	1EA	BALL VALVE, KS 10K, RF FLG'D, BODY-STSF304 /
			TRIM-STS304 / SEAT-PTFE, FB, LEVER
F	40A	2EA	FLG SO, KS 10K, RF, STS304
G	40A	2EA	GASKET, KS 10K, RF, PTFE+EPDM, 3.0MM TH'K
B	40A	2SET	MACHINE BOLT & NUTS :STS 304 / W WASHERS
IN	25tX40A	3.0M	관 보온재(고무발포)

* PIPE : P/P1 * 90° ELBOW : E90 * 45° ELBOW : E45 * TEE : T * RED.TEE : TR * STUB-IN : STU * REINFORCING PAD : RP * CON.RED : RC * ECC.RED : RE * CON.SWAGE : RCS/RCS1 * ECC.SWAGE : RES/RES1 * NIPPLE : NP/NP1/NP2 * CAP : CAP/CAP1 * PLUG : PLG * FULL COUPLING : FC * HALF COUPLING : HF/HF1
* STUB-IN : STU * SOCKET(HDPE/PVC) : SC * SADDLE(HDPE) : SD * FLANGE : F/F1 * GASKET : G/G1/G2 * BOLT & NUT : B/B1 * BLIND FLANGE : FB/FB1 * GATE VA. : VG/VG1/VG2 * BALL VA. : VB/VBLO/VB1/VB1LO/VB2/VB2LO * BUTTERFLY VA. : VF/VF4 * CHECK VA. : VC/VC1/VC2/VC3/VC4/VC5/VC6/VC7
* GLOBE VA. : VL/VL1/VL2 * DIAPHRAGM VA. : VD/VDLO * DAMPER : VP * QUICK COUPLING : SQC * FLEXIBLE JOINT(STEEL) : FLXB * FLEXIBLE JOINT(RUBBER) : FLXR * FLEXIBLE JOINT(STEEL_PTFE LINED) : FLXL * FLEXIBLE HOSE : FLXH * STEAM TRAP : ST * SPRAY NOZZLE : SPN * EMERGENCY SHOWER : SSH
* STRAINER(Y-TYPE) : YSTR * STRAINER(T-TYPE) : TSTR * STRAINER(BUCKET-TYPE) : BSTR * ANCHOR PLATE : STOP * BIRD SCREEN : BS * ISOLATION KIT : IK * UNLOADING BOX : UB * AIR TRAP : AT * LOTO : LOTO * SIGHT GLASS : SG * PRESSURE GAUGE : PG * SHILED : SH * SPECIAL BOLT & NUT : BL/BL1

CLIENT SK hynix

23

INSULATION	CODE	C	CONDITION	PRESS. (kg/cm2g)	TEMP. (°C)
	THICK.	25	DESIGN	13.5	60
			OPERATING	10	AMB

AREA W14
UNIT R1MF
REF. PLAN DWG. CJ-M15W14-PI-A30-010018-C
REF. P & ID CJ-M15W14-PR-A20-000503

REV. NO.	DATE	DESCRIPTION	BY	CHK	APP'D
0	25.01.24	APPROVED FOR CONSTRUCTION	황래종	안남후	박동영

CONTRACTOR SK ecoplant
COMMODITY IW
LINE NO. 40A-IW-ST1-C-7006

PROJECT NAME M15X Ph4 Project
JOB NO. 22330D
SH'T NO. 03 / 04
REV. 0

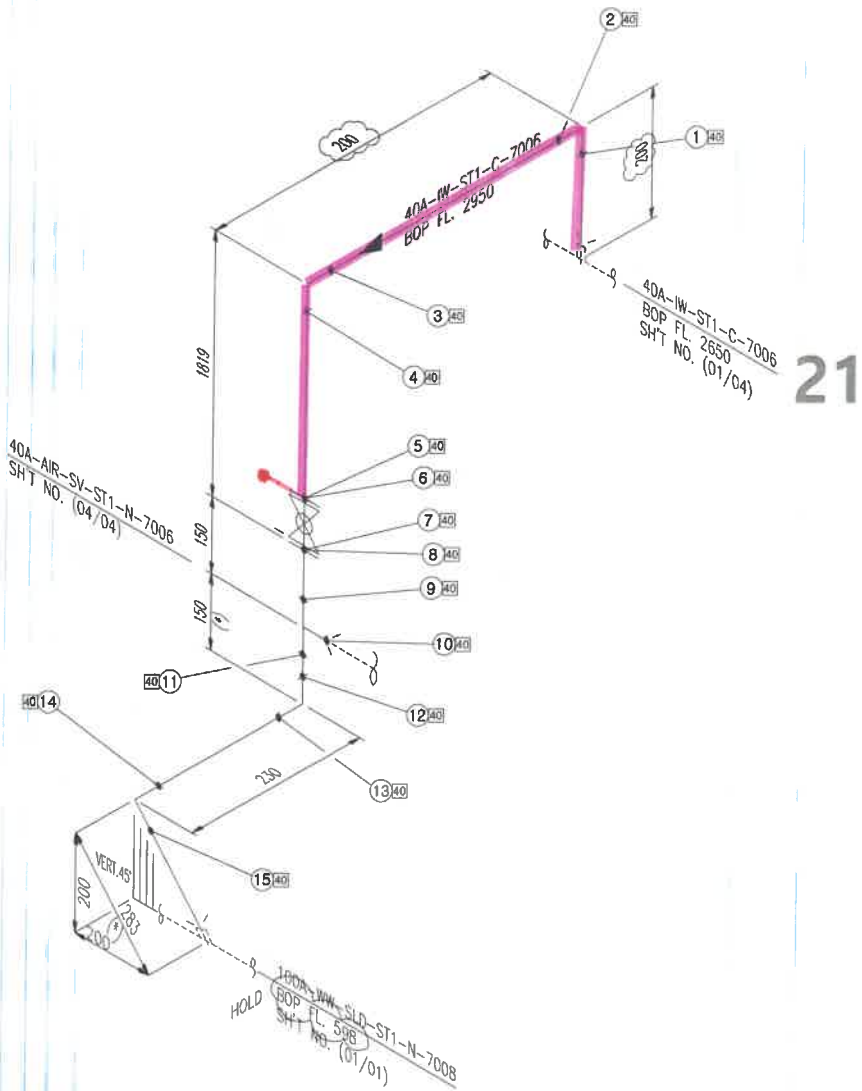

<NOTE>
1. (*) FIELD ADJUST

SK ecoplant

ITEM	SIZE	Q'TY	DESCRIPTION
		ST1	
P	40A	3.3M	PIPE, STS 304TP, ERW, PE - SCH 10S
E90	40A	4EA	ELBOW 90 DEG. STSF304, SW - SCH 10S
T	40A	1EA	TEE EQUAL, STSF304, SW - SCH 10S
VB	40A	1EA	BALL VALVE, KS 10K, RF FLG'D, BODY-STSF304 /
			TRIM-STS304 / SEAT-PTFE, FB, LEVER
F	40A	2EA	FLG SO, KS 10K, RF, STS304
G	40A	2EA	GASKET, KS 10K, RF, PTFE+EPDM, 3.0MM TH'K
B	40A	2SET	MACHINE BOLT & NUTS :STS 304 / W WASHERS
IN	25tX40A	3.3M	곤 보온재(고무발포)

* PIPE : P/P1 * 90° ELBOW : E90 * 45° ELBOW : E45 * TEE : T * RED.TEE : TR * STUB-IN : STU * REINFORCING PAD : RP * CON.RED : RC * ECC.RED : RE * CON.SWAGE : RCS/RCS1 * ECC.SWAGE : RES/RES1 * NIPPLE : NP/NP1/NP2 * CAP : CAP/CAP1 * PLUG : PLG * FULL COUPLING : FC * HALF COUPLING : HF/HF1
* STUB-IN : STU * SOCKET(HDPE/PVC) : SC * SADDLE(HDPE) : SD * FLANGE : F/F1 * GASKET : G/G1/G2 * BOLT & NUT : B/B1 * BLIND FLANGE : FB/FB1 * GATE VA. : VG/VG1/VG2 * BALL VA. : VB/VBLO/VB1/VB1LO/VB2/VB2LO * BUTTERFLY VA. : VF/VF4 * CHECK VA. : VC/VC1/VC2/VC3/VC4/VC5/VC6/VC7
* GLOBE VA. : VL/VL1/VL2 * DIAPHRAGM VA. : VD/VDLO * DAMPER : VP * QUICK COUPLING : SQC * FLEXIBLE JOINT(STEEL) : FLXB * FLEXIBLE JOINT(RUBBER) : FLXR * FLEXIBLE JOINT(STEEL PTFE LINED) : FLXL * FLEXIBLE HOSE : FLXH * STEAM TRAP : ST * SPRAY NOZZLE : SPN * EMERGENCY SHOWER : SSH
* STRAINER(Y-TYPE) : YSTR * STRAINER(T-TYPE) : TSTR * STRAINER(BUCKET-TYPE) : BSTR * ANCHOR PLATE : STOP * BIRD SCREEN : BS * ISOLATION KIT : IK * UNLOADING BOX : UB * AIR TRAP : AT * LOTO : LOTO * SIGHT GLASS : SG * PRESSURE GAUGE : PG * SHIELD : SH * SPECIAL BOLT & NUT : BL/BL1

CLIENT SK hynix 24

INSULATION	CODE	C	CONDITION	PRESS. (kg/cm2g)	TEMP. (°C)
	THICK.	25	DESIGN	13.5	60
			OPERATING	10	AMB

AREA W14
UNIT R1MF
REF. PLAN DWG. CJ-M15W14-PI-A30-010018-C
REF. P & ID CJ-M15W14-PR-A20-000503

REV. NO.	DATE	DESCRIPTION	BY	CHK	APP'D
0	25.01.24	APPROVED FOR CONSTRUCTION	황래종	안남후	박동영

CONTRACTOR SK ecoplant
PROJECT NAME M15X Ph4 Project
COMMODITY IW
JOB NO. 22330D
LINE NO. 40A-IW-ST1-C-7006
SH'T NO. 04 / 04
REV. 0

경고 : 본 도면은 SK HYNIX의 기업비밀 자료로서, 어떠한 경우에도 목적 외 사용, 복제, 제3자에게 공개, 누설 및 유출할 수 없으며, 회사는 유포자의 불법 사용으로 피해가 발생할 경우 유포자에게 민/형사상 책임을 요구할 수 있음.

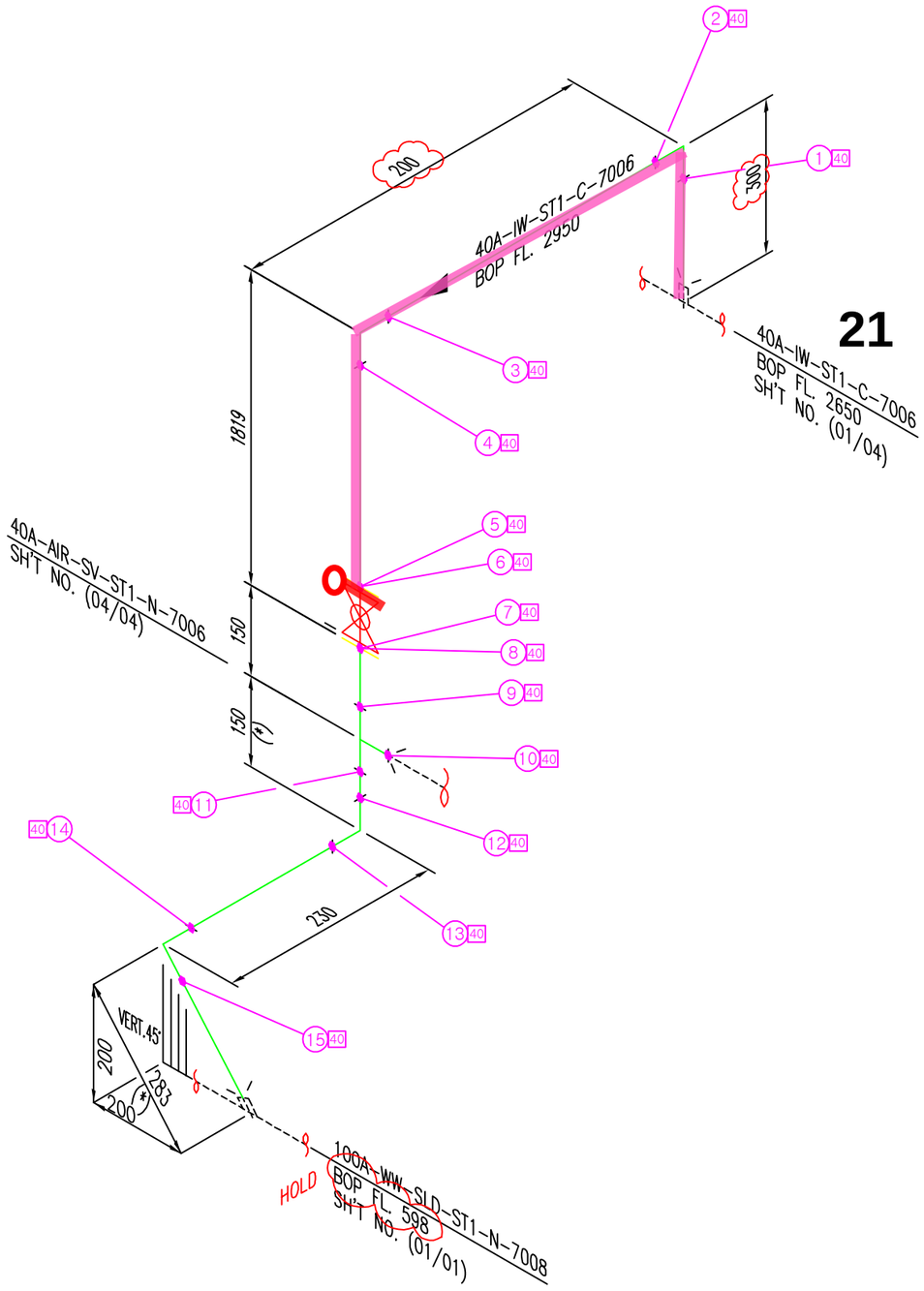

<NOTE>
1. (*) FIELD ADJUST

ITEM	SIZE	Q'TY	DESCRIPTION
		ST1	
P	40A	3.3M	PIPE, STS 304TP, ERW, PE – SCH 10S
E90	40A	4EA	ELBOW 90 DEG, STSF304, SW – SCH 10S
T	40A	1EA	TEE EQUAL, STSF304, SW – SCH 10S
VB	40A	1EA	BALL VALVE, KS 10K, RF FLG'D, BODY–STSF304 /
			TRIM–STS304 / SEAT–PTFE, FB, LEVER
F	40A	2EA	FLG SO, KS 10K, RF, STS304
G	40A	2EA	GASKET, KS 10K, RF, PTFE+EPDM, 3.0MM TH'K
B	40A	2SET	MACHINE BOLT & NUTS :STS 304 / W WASHERS
IN	25tX40A	3.3M	관 보온재(고무발포)

* PIPE : P/P1 * 90° ELBOW : E90 * 45° ELBOW : E45 * TEE : T * RED.TEE : TR * STUB-IN : STU * REINFORCING PAD : RP * CON.RED : RC * ECC.RED : RE * CON.SWAGE : RCS/RCS1 * ECC.SWAGE : RES/RES1 * NIPPLE : NP/NP1/NP2 * CAP : CAP/CAP1 * PLUG : PLG * FULL COUPLING : FC * HALF COUPLING : HF/HF1
* STUB-IN : STU * SOCKET(HDPE/PVC) : SC * SADDLE(HDPE) : SD * FLANGE : F/F1 * GASKET : G/G1/G2 * BOLT & NUT : B/B1 * BLIND FLANGE : FB/FB1 * GATE VA. : VG/VG1/VG2 * BALL VA. : VB/VBL0/VB1/VB1L0/VB2/VB2L0 * BUTTERFLY VA. : VF/VF4 * CHECK VA. : VC/VC1/VC2/VC3/VC4/VC5/VC6/VC7
* GLOBE VA. : VL/VL1/VL2 * DIAPHRAGM VA. : VD/VDL0 * DAMPER : VP * QUICK COUPLING : SQC * FLEXIBLE JOINT(STEEL) : FLXB * FLEXIBLE JOINT(RUBBER) : FLXR * FLEXIBLE JOINT(STEEL_PTFE LINED) : FLXL * FLEXIBLE HOSE : FLXH * STEAM TRAP : ST * SPRAY NOZZLE : SPN * EMERGENCY SHOWER : SSH
* STRAINER(Y-TYPE) : YSTR * STRAINER(T-TYPE) : TSTR * STRAINER(BUCKET-TYPE) : BSTR * ANCHOR PLATE : STOP * BIRD SCREEN : BS * ISOLATION KIT : IK * UNLOADING BOX : UB * AIR TRAP : AT * LOTO : LOTO * SIGHT GLASS : SG * PRESSURE GAUGE : PG * SHILED : SH * SPECIAL BOLT & NUT : BL/BL1

CLIENT: SK hynix

24

INSULATION	CODE	C	CONDITION	PRESS. (kg/cm2g)	TEMP. (°C)
	THICK.	25	DESIGN	13.5	60
			OPERATING	10	AMB

AREA: W14
UNIT: R1MF
REF. PLAN DWG.: CJ-M15W14-PI-A30-010018-C
REF. P. & ID: CJ-M15W14-PR-A20-000503

REV. NO.	DATE	DESCRIPTION	BY	CHK	APP'D
0	25.01.24	APPROVED FOR CONSTRUCTION	황래종	안남후	박동영

CONTRACTOR: SK ecoplant
COMMODITY: IW
LINE NO.: 40A-IW-ST1-C-7006
PROJECT NAME: M15X Ph4 Project
JOB NO.: 22330D
SH'T NO.: 04 / 04
REV.: 0

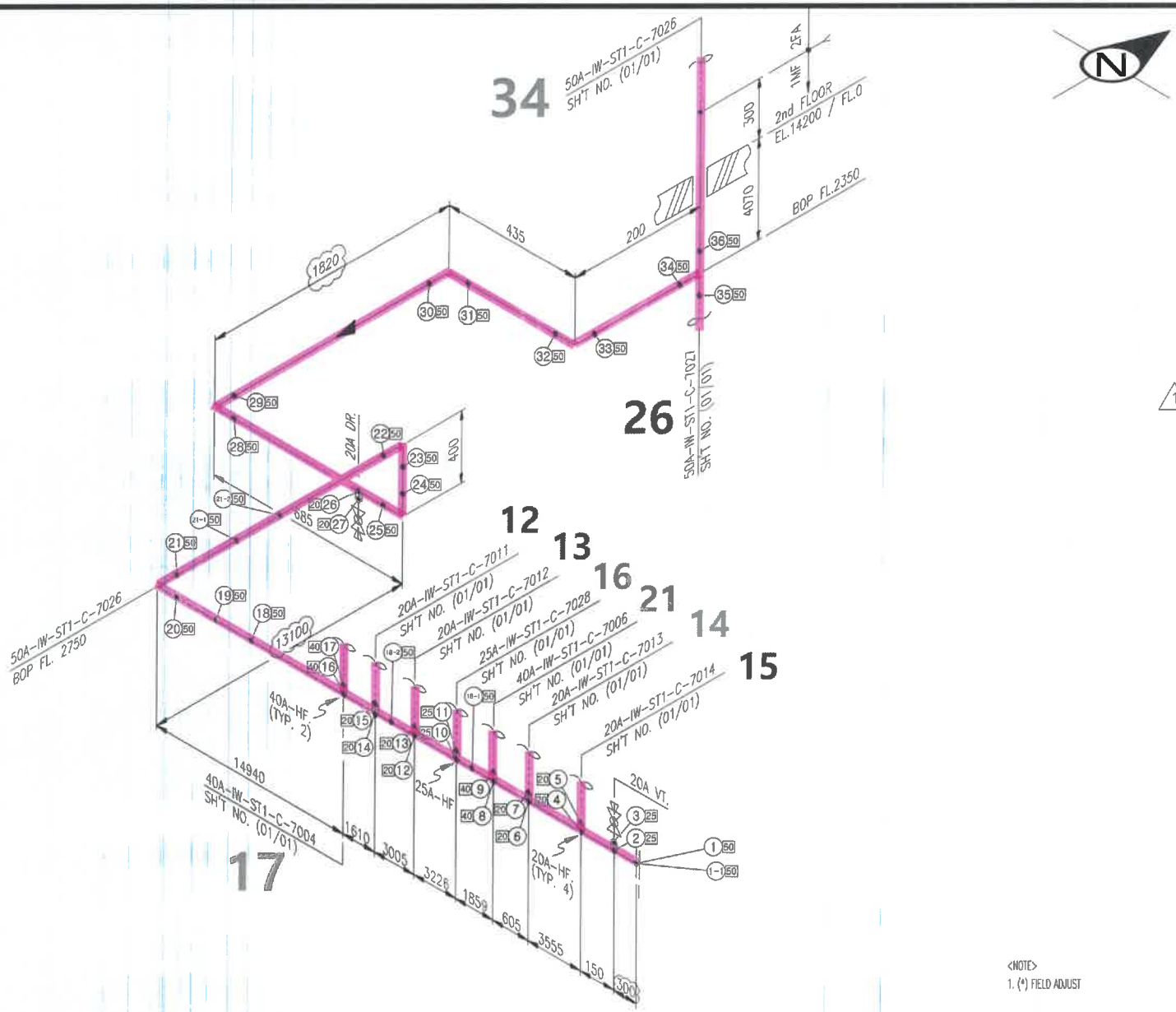

N

SK ecoplant

ITEM	SIZE	Q'TY	DESCRIPTION
		ST1	
P	50A	50.0M	PIPE, STS 304TP, ERW, BE – SCH 10S
E90	50A	6EA	ELBOW 90 DEG LR, STS304, ERW, BE – SCH 10S
T	50A	1EA	TEE EQUAL, STS304, ERW, BE – SCH 10S
NP1	20A	2EA	NIPPLE, STS 304TP, ERW, TOE – SCH 40S
HF	40A	2EA	COUPLING HALF, STSF304, SW – SCH 10S
HF	25A	1EA	COUPLING HALF, STSF304, SW – SCH 10S
HF	20A	6EA	COUPLING HALF, STSF304, SW – SCH 10S
PLG	20A	2EA	PLUG ROUND HEAD, STSF304, SCR'D
VB1	20A	2EA	BALL VALVE, KS 10K, SCR'D, BODY-STSF304 /
			TRIM-STS304 / SEAT-PTFE, FB, LEVER
F	50A	1EA	FLG SO, KS 10K, RF, STS304
FB	50A	1EA	FLG BLIND, KS 10K, RF, STS304
G	50A	1EA	GASKET, KS 10K, RF, PTFE+EPDM, 3.0MM TH'K
B	50A	1SET	MACHINE BOLT & NUTS :STS 304 / W WASHERS
IN	251X20A	50.0M	근 보온재(고무발포)

<NOTE>
1. (*) FIELD ADJUST

* PIPE : P/P1 * 90° ELBOW : E90 * 45° ELBOW : E45 * TEE : T * RED.TEE : TR * STUB-IN : STU * REINFORCING PAD : RP * CON.RED : RC * ECC.RED : RE * CON.SWAGE : RCS/RCS1 * ECC.SWAGE : RES/RES1 * NIPPLE : NP/NP1/NP2 * CAP : CAP/CAP1 * PLUG : PLG * FULL COUPLING : FC * HALF COUPLING : HF/HF1
* STUB-IN : STU * SOCKET(HDPE/PVC) : SC * SADDLE(HDPE) : SD * FLANGE : F/F1 * GASKET : G/G1/G2 * BOLT & NUT : B/B1 * BLIND FLANGE : FB/FB1 * GATE VA. : VG/VG1/VG2 * BALL VA : VB/VBL0/VB1/VB1L0/VB2/VB2L0 * BUTTERFLY VA : VF/VF4 * CHECK VA : VC/VC1/VC2/VC3/VC4/VC5/VC6/VC7
* GLOBE VA. : VL/VL1/VL2 * DIAPHRAGM VA. : VD/VDL0 * DAMPER : VP * QUICK COUPLING : SQC * FLEXIBLE JOINT(STEEL) : FLXB * FLEXIBLE JOINT(RUBBER) : FLXR * FLEXIBLE JOINT(STEEL_PTFE LINED) : FLXL * FLEXIBLE HOSE : FLXH * STEAM TRAP : ST * SPRAY NOZZLE : SPN * EMERGENCY SHOWER : SSH
* STRAINER(Y-TYPE) : YSTR * STRAINER(T-TYPE) : TSTR * STRAINER(BUCKET-TYPE) : BSTR * ANCHOR PLATE : STOP * BIRD SCREEN : BS * ISOLATION KIT : IK * UNLOADING BOX : UB * AIR TRAP : AT * LOTO : LOTO * SIGHT GLASS : SG * PRESSURE GAUGE : PG * SHILED : SH * SPECIAL BOLT & NUT : BL/BL1

CLIENT SK hynix 25

INSULATION	CODE	C	CONDITION	PRESS. (kg/cm2g)	TEMP. (°C)
	THICK.	–	DESIGN	10	60
			OPERATING	7.5	AMB

AREA W14
UNIT 1MF
REF. PLAN DWG. CJ-M15W14-PI-A30-010017-D
REF. P & ID CJ-M15W13-PR-A20-000081

REV. NO.	DATE	DESCRIPTION	BY	CHK	APP'D
1	25.03.31	REVISED AS MARKED	황래종	안남후	박동영
0	25.01.24	APPROVED FOR CONSTRUCTION	황래종	안남후	박동영

CONTRACTOR SK ecoplant
PROJECT NAME M15X Ph4 Project
COMMODITY IW
JOB NO. 22330D
LINE NO. 50A-IW-ST1-C-7026
SH'T NO. 01 / 01
REV. 1

경고 : 본 도면은 SK HYNIX의 기업비밀 자료로서, 어떠한 경우에도 목적 외 사용, 복제, 제3자에게 공개, 누설 및 유출할 수 없으며, 회사는 유포자의 불법 사용으로 피해가 발생할 경우 유포자에게 민/형사상 책임을 요구할 수 있음.

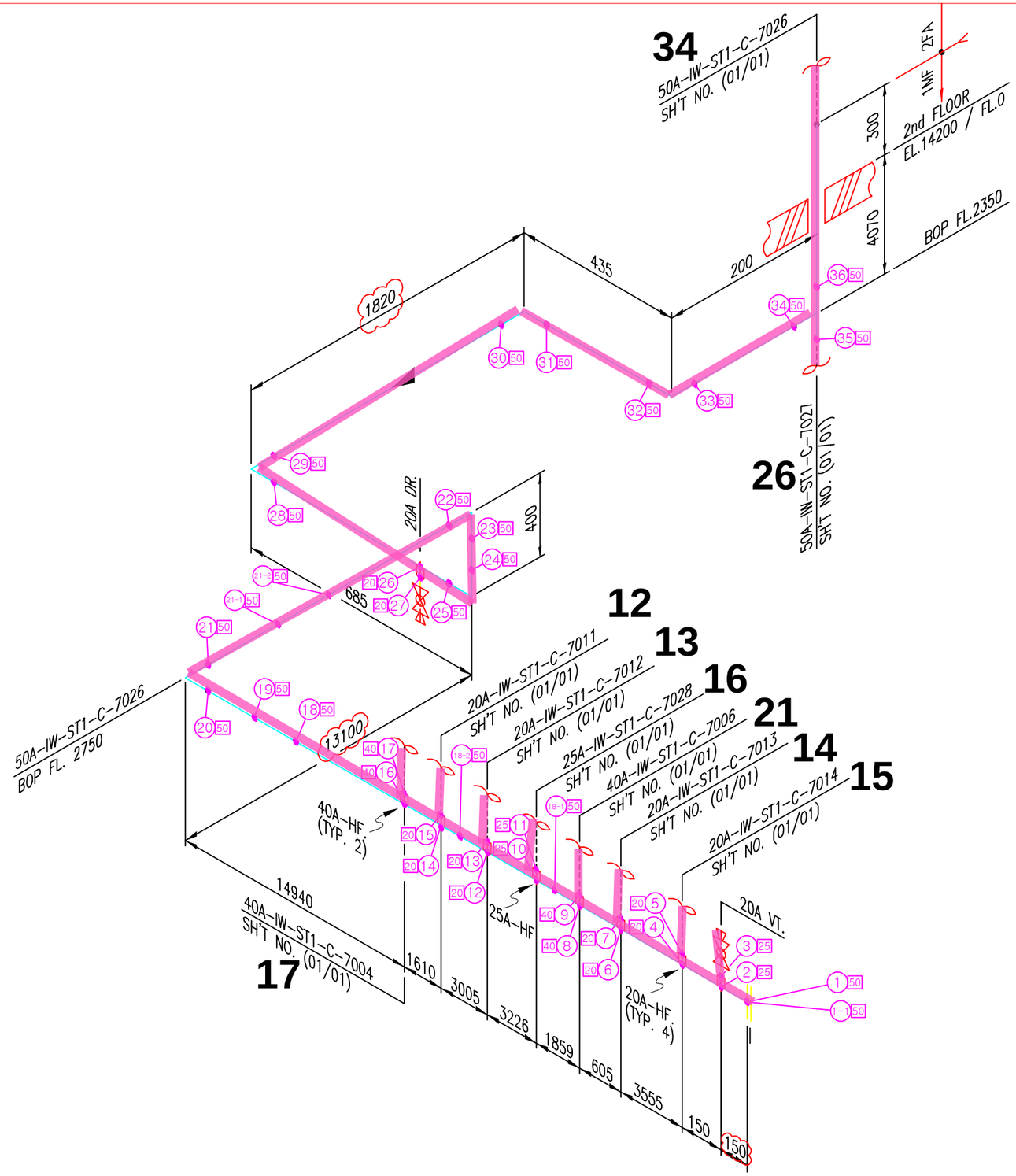

SK ecoplant

ITEM	SIZE	Q'TY	DESCRIPTION
	1	ST1	
P	50A	50.0M	PIPE, STS 304TP, ERW, BE – SCH 10S
E90	50A	6EA	ELBOW 90 DEG LR, STS304, ERW, BE – SCH 10S
T	50A	1EA	TEE EQUAL, STS304, ERW, BE – SCH 10S
NP1	20A	2EA	NIPPLE, STS 304TP, ERW, TOE – SCH 40S
HF	40A	2EA	COUPLING HALF, STSF304, SW – SCH 10S
HF	25A	1EA	COUPLING HALF, STSF304, SW – SCH 10S
HF	20A	6EA	COUPLING HALF, STSF304, SW – SCH 10S
PLG	20A	2EA	PLUG ROUND HEAD, STSF304, SCR'D
VB1	20A	2EA	BALL VALVE, KS 10K, SCR'D, BODY–STSF304 /
			TRIM–STS304 / SEAT–PTFE, FB, LEVER
F	50A	1EA	FLG SO, KS 10K, RF, STS304
FB	50A	1EA	FLG BLIND, KS 10K, RF, STS304
G	50A	1EA	GASKET, KS 10K, RF, PTFE+EPDM, 3.0MM TH'K
B	50A	1SET	MACHINE BOLT & NUTS :STS 304 / W WASHERS
1 IN	25tX20A	50.0M	곤 보온재(고무발포)

<NOTE>
1. (*) FIELD ADJUST

* PIPE : P/P1 * 90° ELBOW : E90 * 45° ELBOW : E45 * TEE : T * RED.TEE : TR * STUB-IN : STU * REINFORCING PAD : RP * CON.RED : RC * ECC.RED : RE * CON.SWAGE : RCS/RCS1 * ECC.SWAGE : RES/RES1 * NIPPLE : NP/NP1/NP2 * CAP : CAP/CAP1 * PLUG : PLG * FULL COUPLING : FC * HALF COUPLING : HF/HF1
* STUB-IN : STU * SOCKET(HDPE/PVC) : SC * SADDLE(HDPE) : SD * FLANGE : F/F1 * GASKET : G/G1/G2 * BOLT & NUT : B/B1 * BLIND FLANGE : FB/FB1 * GATE VA. : VG/VG1/VG2 * BALL VA. : VB/VBL0/VB1/VB1L0/VB2/VB2L0 * BUTTERFLY VA. : VF/VF4 * CHECK VA. : VC/VC1/VC2/VC3/VC4/VC5/VC6/VC7
* GLOBE VA. : VL/VL1/VL2 * DIAPHRAGM VA. : VD/VDL0 * DAMPER : VP * QUICK COUPLING : SQC * FLEXIBLE JOINT(STEEL) : FLXB * FLEXIBLE JOINT(RUBBER) : FLXR * FLEXIBLE JOINT(STEEL PTFE LINED) : FLXL * FLEXIBLE HOSE : FLXH * STEAM TRAP : ST * SPRAY NOZZLE : SPN * EMERGENCY SHOWER : SSH
* STRAINER(Y-TYPE) : YSTR * STRAINER(T-TYPE) : TSTR * STRAINER(BUCKET-TYPE) : BSTR * ANCHOR PLATE : STOP * BIRD SCREEN : BS * ISOLATION KIT : IK * UNLOADING BOX : UB * AIR TRAP : AT * LOTO : LOTO * SIGHT GLASS : SG * PRESSURE GAUGE : PG * SHILED : SH * SPECIAL BOLT & NUT : BL/BL1

CLIENT: SK hynix

25

INSULATION	CODE	C	CONDITION	PRESS. (kg/cm2g)	TEMP. (°C)
	THICK.	–	DESIGN	10	60
			OPERATING	7.5	AMB

AREA: W14
UNIT: 1MF
REF. PLAN DWG.: CJ-M15W14-PI-A30-010017-D
REF. P. & ID: CJ-M15W13-PR-A20-000081

REV. NO.	DATE	DESCRIPTION	BY	CHK	APP'D
1	25.03.31	REVISED AS MARKED	황래종	안남후	박동영
0	25.01.24	APPROVED FOR CONSTRUCTION	황래종	안남후	박동영

CONTRACTOR: SK ecoplant
COMMODITY: IW
LINE NO.: 50A-IW-ST1-C-7026
PROJECT NAME: M15X Ph4 Project
JOB NO.: 22330D
SH'T NO.: 01 / 01
REV.: 1

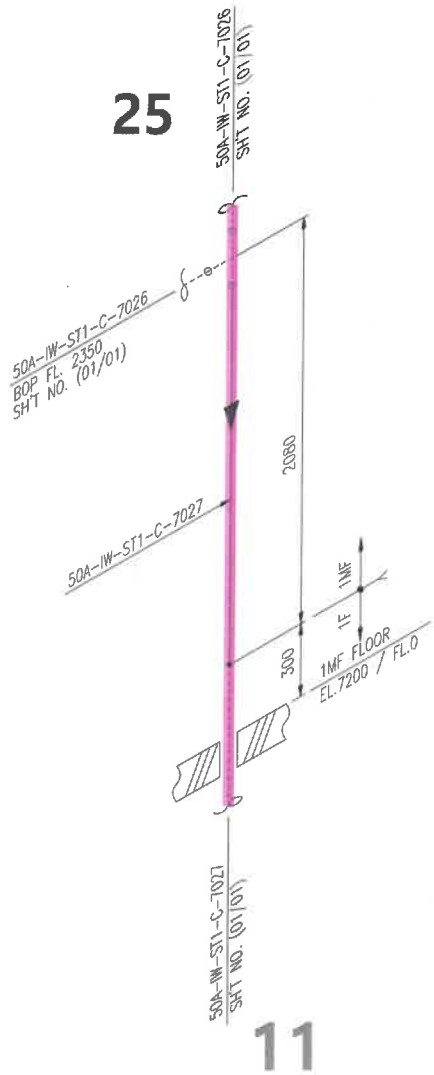

N

SK ecoplant

ITEM	SIZE	Q'TY	DESCRIPTION
		ST1	
P	50A	2.1M	PIPE, STS 304TP, ERW, BE - SCH 10S

<NOTE>
1. (*) FIELD ADJUST

* PIPE : P/P1 * 90° ELBOW : E90 * 45° ELBOW : E45 * TEE : T * RED.TEE : TR * STUB-IN : STU * REINFORCING PAD : RP * CON.RED : RC * ECC.RED : RE * CON.SWAGE : RCS/RCS1 * ECC.SWAGE : RES/RES1 * NIPPLE : NP/NP1/NP2 * CAP : CAP/CAP1 * PLUG : PLG * FULL COUPLING : FC * HALF COUPLING : HF/HF1
* STUB-IN : STU * SOCKET(HDPE/PVC) : SC * SADDLE(HDPE) : SD * FLANGE : F/F1 * GASKET : G/G1/G2 * BOLT & NUT : B/B1 * BLIND FLANGE : FB/FB1 * GATE VA. : VG/VG1/VG2 * BALL VA. : VB/VBLO/VB1/VB1LO/VB2/VB2LO * BUTTERFLY VA. : VF/VF4 * CHECK VA. : VC/VC1/VC2/VC3/VC4/VC5/VC6/VC7
* GLOBE VA. : VL/VL1/VL2 * DIAPHRAGM VA. : VD/VDLO * DAMPER : VP * QUICK COUPLING : SQC * FLEXIBLE JOINT(STEEL) : FLXB * FLEXIBLE JOINT(RUBBER) : FLXR * FLEXIBLE JOINT(STEEL PTFE LINED) : FLXL * FLEXIBLE HOSE : FLXH * STEAM TRAP : ST * SPRAY NOZZLE : SPN * EMERGENCY SHOWER : SSH
* STRAINER(Y-TYPE) : YSTR * STRAINER(T-TYPE) : TSTR * STRAINER(BUCKET-TYPE) BSTR * ANCHOR PLATE : STOP * BIRD SCREEN : BS * ISOLATION KIT : IK * UNLOADING BOX : UB * AIR TRAP : AT * LOTO : LOTO * SIGHT GLASS : SG * PRESSURE GAUGE : PG * SHILED : SH * SPECIAL BOLT & NUT : BL/BL1

CLIENT SK hynix 26

INSULATION	CODE	C	CONDITION	PRESS. (kg/cm2g)	TEMP. (°C)
	THICK.	-	DESIGN	10	60
			OPERATING	7.5	AMB

AREA W14
UNIT 1MF
REF. PLAN DWG. CJ-M15W14-PI-A30-010017-D
REF. P & ID CJ-M15W13-PR-A20-0000B1

REV. NO.	DATE	DESCRIPTION	BY	CHK	APP'D
0	25.01.24	APPROVED FOR CONSTRUCTION	황래중	안남후	박동영

CONTRACTOR SK ecoplant
PROJECT NAME M15X Ph4 Project
COMMODITY IW
JOB NO. 22330D
LINE NO. 50A-IW-ST1-C-7027
SH'T NO. 01 / 01
REV. 0

경고 : 본 도면은 SK HYNIX의 기업비밀 자료로서, 어떠한 경우에도 복사 외 사용, 복제, 제3자에게 공개, 누설 및 유출할 수 없으며, 회사는 유포자의 불법 사용으로 피해가 발생할 경우 유포자에게 민/형사상 책임을 요구할 수 있음.

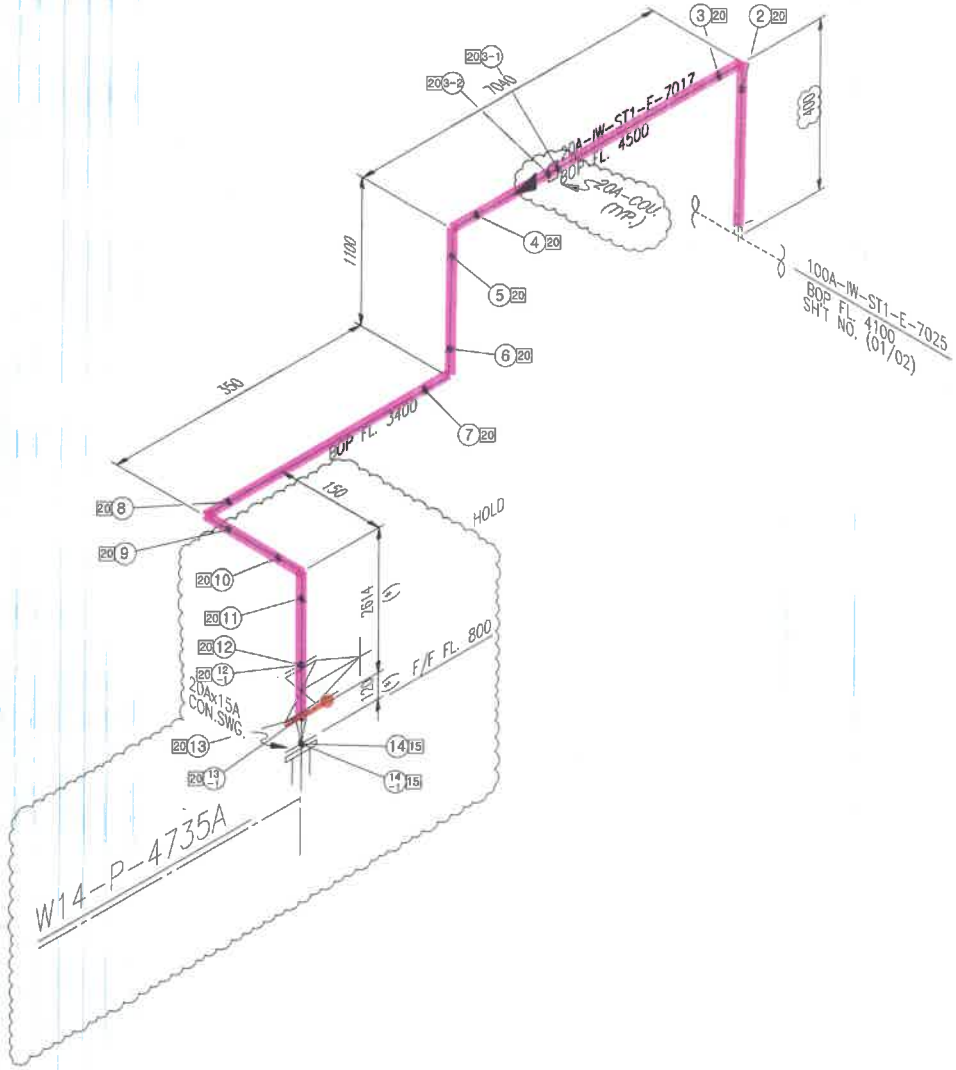

35

N

SK ecoplant

ITEM	SIZE	Q'TY	DESCRIPTION
		ST1	
P	20A	11.8M	PIPE, STS 304TP, ERW, PE - SCH 10S
E90	20A	5EA	ELBOW 90 DEG, STSF304, SW - SCH 10S
RCS	20Ax15A	1EA	SWAGE CON, STSF304, PBE - SCH 10S
FC	20A	1EA	COUPLING FULL, STSF304, SW - SCH 10S
VG	20A	1EA	GATE VALVE, KS 10K, RF FLG'D, BODY-STSF304 /
			TRIM-STS304, BB / OS&Y, HANDWHEEL
F	20A	2EA	FLG SO, KS 10K, RF, STS304
F	15A	1EA	FLG SO, KS 10K, RF, STS304
G	20A	2EA	GASKET, KS 10K, RF, PTFE+EPDM, 3.0MM TH'K
G	15A	1EA	GASKET, KS 10K, RF, PTFE+EPDM, 3.0MM TH'K
B	20A	2SET	MACHINE BOLT & NUTS :STS 304 / W WASHERS
B	15A	1SET	MACHINE BOLT & NUTS :STS 304 / W WASHERS
INC	25tX20A	11.8M	건 보온재(고무발포) + 알루미늄 CASING

<NOTE>
1. (*) FIELD ADJUST

* PIPE : P/P1 * 90' ELBOW : E90 * 45' ELBOW : E45 * TEE : T * RED.TEE : TR * STUB-IN : STU * REINFORCING PAD : RP * CON.RED : RC * ECC.RED : RE * CON.SWAGE : RCS/RCS1 * ECC.SWAGE : RES/RES1 * NIPPLE : NP/NP1/NP2 * CAP : CAP/CAP1 * PLUG : PLG * FULL COUPLING : FC * HALF COUPLING : HF/HF1
* STUB-IN : STU * SOCKET(HDPE/PVC) : SC * SADDLE(HDPE) : SD * FLANGE : F/F1 * GASKET : G/G1/G2 * BOLT & NUT : B/B1 * BLIND FLANGE : FB/FB1 * GATE VA. : VG/VG1/VG2 * BALL VA. : VB/VBLO/VB1/VB1LO/VB2/VB2LO * BUTTERFLY VA. : VF/VF4 * CHECK VA. : VC/VC1/VC2/VC3/VC4/VC5/VC6/VC7
* GLOBE VA. : VL/VL1/VL2 * DIAPHRAGM VA. : VD/VDLO * DAMPER : VP * QUICK COUPLING : SQC * FLEXIBLE JOINT(STEEL) : FLXB * FLEXIBLE JOINT(RUBBER) : FLXR * FLEXIBLE JOINT(STEEL PTFE LINED) : FLXI * FLEXIBLE HOSE : FLXH * STEAM TRAP : ST * SPRAY NOZZLE : SPN * EMERGENCY SHOWER : SSH
* STRAINER(Y-TYPE) : YSTR * STRAINER(I-TYPE) : TSTR * STRAINER(BUCKET-TYPE) : BSTR * ANCHOR PLATE : STOP * BIRD SCREEN : BS * ISOLATION KIT : IK * UNLOADING BOX : UB * AIR TRAP : AT * LOTO : LOTO * SIGHT GLASS : SG * PRESSURE GAUGE : PG * SHIELD : SH * SPECIAL BOLT & NUT : BL/BL1

CLIENT SK hynix 27

INSULATION	CODE	E	CONDITION	PRESS. (kg/cm2g)	TEMP. (°C)
	THICK.	25	DESIGN	13.5	60
			OPERATING	10	AMB

AREA W14
UNIT R2FA
REF. PLAN DWG. CJ-M15W14-PI-A30-020014-A
REF. P & ID CJ-M15W13-PR-A20-000081

REV. NO.	DATE	DESCRIPTION	BY	CHK	APP'D
0	25.03.31	REVISED AS MARKED	황래종	안남후	박동영
0	25.01.24	APPROVED FOR CONSTRUCTION	황래종	안남후	박동영

CONTRACTOR SK ecoplant
COMMODITY IW
LINE NO. 20A-IW-ST1-E-7017
PROJECT NAME M15X Ph4 Project
JOB NO. 22330D
SH'T NO. 01 / 01 REV. 1

경고 : 본 도면은 SK HYNIX의 기업비밀 자료로서, 어떠한 경우에도 복적 외 사용, 복제, 제3자에게 공개, 누설 및 유출할 수 없으며, 회사는 유포자의 불법 사용으로 피해가 발생할 경우 유포자에게 민/형사상 책임을 요구할 수 있음.

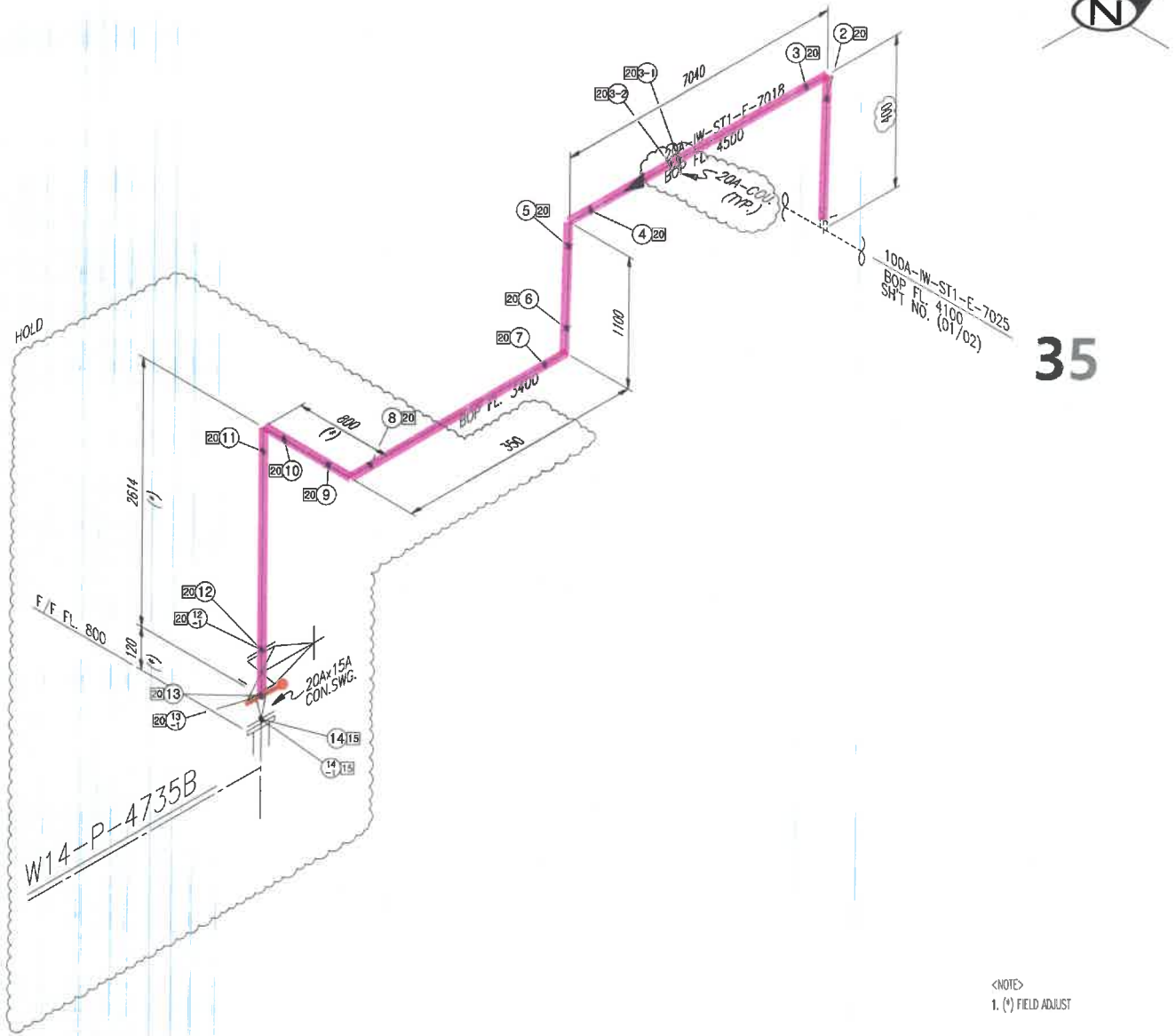

35

<NOTE>
1. (*) FIELD ADJUST

ITEM	SIZE	Q'TY	DESCRIPTION
		ST1	
P	20A	12.4M	PIPE, STS 304TP, ERW, PE – SCH 10S
E90	20A	5EA	ELBOW 90 DEG, STSF304, SW – SCH 10S
RCS	20A×15A	1EA	SWAGE CON, STSF304, PBE – SCH 10S
FC	20A	1EA	COUPLING FULL, STSF304, SW – SCH 10S
VG	20A	1EA	GATE VALVE, KS 10K, RF FLG'D, BODY-STSF304 /
			TRIM-STS304, BB / OS&Y, HANDWHEEL
F	20A	2EA	FLG SO, KS 10K, RF, STS304
F	15A	1EA	FLG SO, KS 10K, RF, STS304
G	20A	2EA	GASKET, KS 10K, RF, PTFE+EPDM, 3.0MM TH'K
G	15A	1EA	GASKET, KS 10K, RF, PTFE+EPDM, 3.0MM TH'K
B	20A	2SET	MACHINE BOLT & NUTS :STS 304 / W WASHERS
B	15A	1SET	MACHINE BOLT & NUTS :STS 304 / W WASHERS
INC	25tX20A	12.4M	관 보온재(고무발포) + 알루미늄 CASING

* PIPE : P/P1 * 90° ELBOW : E90 * 45° ELBOW : E45 * TEE : T * RED.TEE : TR * STUB-IN : STU * REINFORCING PAD : RP * CON.RED : RC * ECC.RED : RE * CON.SWAGE : RCS/RCS1 * ECC.SWAGE : RES/RES1 * NIPPLE : NP/NP1/NP2 * CAP : CAP/CAP1 * PLUG : PLG * FULL COUPLING : FC * HALF COUPLING : HF/HF1
* STUB-IN : STU * SOCKET(HDPE/PVC) : SC * SADDLE(HDPE) : SD * FLANGE : F/F1 * GASKET : G/G1/G2 * BOLT & NUT : B/B1 * BLIND FLANGE : FB/FB1 * GATE VA. : VG/VG1/VG2 * BALL VA. : VB/VBLO/VB1/VB1LO/VB2/VB2LO * BUTTERFLY VA. : VF/VF4 * CHECK VA. : VC/VC1/VC2/VC3/VC4/VC5/VC6/VC7
* GLOBE VA. : VL/VL1/VL2 * DIAPHRAGM VA. : VD/VDLO * DAMPER : VP * QUICK COUPLING : SQC * FLEXIBLE JOINT(STEEL) : FLXB * FLEXIBLE JOINT(RUBBER) : FLXR * FLEXIBLE JOINT(STEEL PTFE LINED) : FLXL * FLEXIBLE HOSE : FLXH * STEAM TRAP : ST * SPRAY NOZZLE : SPN * EMERGENCY SHOWER : SSH
* STRAINER(Y-TYPE) : YSTR * STRAINER(I-TYPE) : TSTR * STRAINER(BUCKET-TYPE) : BSTR * ANCHOR PLATE : STOP * BIRD SCREEN : BS * ISOLATION KIT : IK * UNLOADING BOX : UB * AIR TRAP : AT * LOTO : LOTO * SIGHT GLASS : SG * PRESSURE GAUGE : PG * SHILED : SH * SPECIAL BOLT & NUT : BL/BL1

CLIENT SK hynix 28

INSULATION	CODE	E	CONDITION	PRESS. (kg/cm2g)	TEMP. (°C)
	THICK.	25	DESIGN	13.5	60
			OPERATING	10	AMB

AREA W14
UNIT R2FA
REF. PLAN DWG. CJ-M15W14-PI-A30-020014-A
REF. P & ID CJ-M15W13-PR-A20-000081

REV. NO.	DATE	DESCRIPTION	BY	CHK	APP'D
1	25.03.31	REVISED AS MARKED	황래종	안남후	박동영
0	25.01.24	APPROVED FOR CONSTRUCTION	황래종	안남후	박동영

CONTRACTOR SK ecoplant
PROJECT NAME M15X Pfn4 Project
COMMODITY IW
JOB NO. 22330D
LINE NO. 20A-IW-ST1-E-7018
SH'T NO. 01 / 01
REV. 1

경고 : 본 도면은 SK HYNIX의 기업비밀 자료로서, 어떠한 경우에도 목적 외 사용, 복제, 제3자에게 공개, 누설 및 유출할 수 없으며, 회사는 유포자의 불법 사용으로 피해가 발생할 경우 유포자에게 민/형사상 책임을 요구할 수 있음.

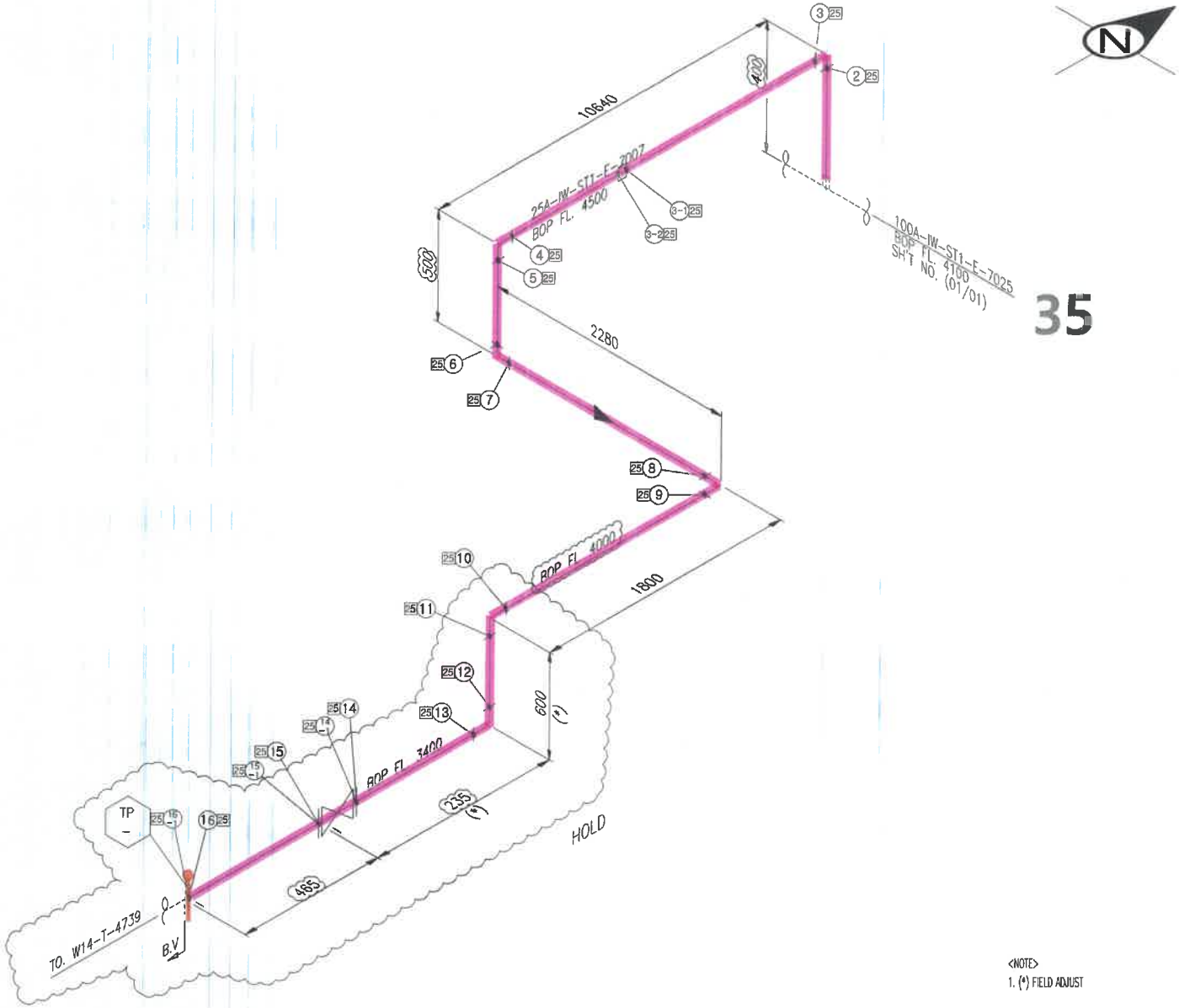

<NOTE>
1. (*) FIELD ADJUST

SK ecoplant

ITEM	SIZE	Q'TY	DESCRIPTION
		ST1	
P	25A	17.0M	PIPE, STS 304TP, ERW, PE – SCH 10S
E90	25A	6EA	ELBOW 90 DEG, STSF304, SW – SCH 10S
FC	25A	1EA	COUPLING FULL, STSF304, SW – SCH 10S
VG	25A	1EA	GATE VALVE, KS 10K, RF FLG'D, BODY-STSF304 /
			TRIM-STS304, BB / OS&Y, HANDWHEEL
F	25A	3EA	FLG SO, KS 10K, RF, STS304
G	25A	3EA	GASKET, KS 10K, RF, PTFE+EPDM, 3.0MM TH'K
B	25A	3SET	MACHINE BOLT & NUTS :STS 304 / W WASHERS
INC	25tX25A	17.0M	권 보온재(고무발포) + 알루미늄 CASING
INEC	25tX25A	6EA	권 보온재(고무발포) + 알루미늄 CASING
INVC	25tX25A	1EA	권 보온재(고무발포) + 알루미늄 CASING

* PIPE : P/P1 * 90° ELBOW : E90 * 45° ELBOW : E45 * TEE : T * RED.TEE : TR * STUB-IN : STU * REINFORCING PAD : RP * CON.RED : RC * ECC.RED : RE * CON.SWAGE : RCS/RCS1 * ECC.SWAGE : RES/RES1 * NIPPLE : NP/NP1/NP2 * CAP : CAP/CAP1 * PLUG : PLG * FULL COUPLING : FC * HALF COUPLING : HF/HF1
* STUB-IN : STU * SOCKET(HDPE/PVC) : SC * SADDLE(HDPE) : SD * FLANGE : F/F1 * GASKET : G/G1/G2 * BOLT & NUT : B/B1 * BLIND FLANGE : FB/FB1 * GATE VA. : VG/VG1/VG2 * BALL VA. : VB/VBL0/VB1/VB1L0/VB2/VB2L0 * BUTTERFLY VA. : VF/VF4 * CHECK VA. : VC/VC1/VC2/VC3/VC4/VC5/VC6/VC7
* GLOBE VA. : VL/VL1/VL2 * DIAPHRAGM VA. : VD/VDL0 * DAMPER : VP * QUICK COUPLING : SQC * FLEXIBLE JOINT(STEEL) : FLXB * FLEXIBLE JOINT(RUBBER) : FLXR * FLEXIBLE JOINT(STEEL PTFE LINED) : FLXL * FLEXIBLE HOSE : FLXH * STEAM TRAP : ST * SPRAY NOZZLE : SPN * EMERGENCY SHOWER : SSH
* STRAINER(Y-TYPE) : YSTR * STRAINER(T-TYPE) : TSTR * STRAINER(BUCKET-TYPE) : BSTR * ANCHOR PLATE : STOP * BIRD SCREEN : BS * ISOLATION KIT : IK * UNLOADING BOX : UB * AIR TRAP : AT * LOTO : LOTO * SIGHT GLASS : SG * PRESSURE GAUGE : PG * SHILED : SH * SPECIAL BOLT & NUT : BL/BLI

CLIENT SK hynix 29

INSULATION	CODE	E	CONDITION	PRESS. (kg/cm2g)	TEMP. (°C)	AREA W14						CONTRACTOR SK ecoplant	PROJECT NAME M15X Ph4 Project
	THICK.	25	DESIGN	10	60	UNIT R2FA						COMMODITY IW	JOB NO. 22330D
			OPERATING	7.5	AMB	REF. PLAN DWG. CJ-M15W14-PI-A30-020014-B						LINE NO. 25A-IW-ST1-E-7007	SH'T NO. 01 / 01 REV. 0
						REF. P & ID CJ-M15W14-PR-A20-000506	D	25.01.24	APPROVED FOR CONSTRUCTION	황래종	안남후	박동영	
							REV. NO.	DATE	DESCRIPTION	BY	CHK	APP'D	

경고 : 본 도면은 SK HYNIX의 기업비밀 자료로서, 어떠한 경우에도 목적 외 사용, 복제, 제3자에게 공개, 누설 및 유출할 수 없으며, 회사는 유포자의 불법 사용으로 피해가 발생할 경우 유포자에게 민/형사상 책임을 요구할 수 있음.

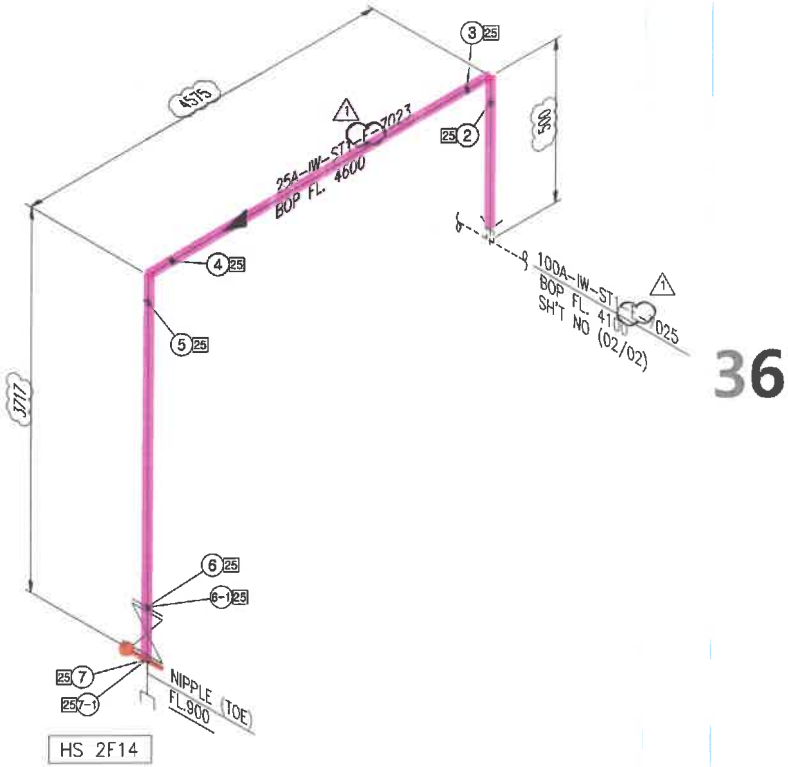

<NOTE>
1. (*) FIELD ADJUST

SK ecoplant

ITEM	SIZE	Q'TY	DESCRIPTION
		ST1	
P	25A	8.2M	PIPE, STS 304TP, ERW, PE - SCH 10S
NP1	25A	1EA	NIPPLE, STS 304TP, ERW, TOE - SCH 40S
E90	25A	2EA	ELBOW 90 DEG, STSF304, SW - SCH 10S
VG	25A	1EA	GATE VALVE, KS 10K, RF FLG'D, BODY-STSF304 /
			TRIM-STS304, BB / OS&Y, HANDWHEEL
F	25A	2EA	FLG SO, KS 10K, RF, STS304
G	25A	2EA	GASKET, KS 10K, RF, PTFE+EPDM, 3.0MM TH'K
B	25A	2SET	MACHINE BOLT & NUTS :STS 304 / W WASHERS
SOC	25A	1EA	~~QUICK COUPLING~~
1 INC	25tX25A	8.2M	곤 보온재(고무발포) + 알루미늄 CASING 1

* PIPE : P/P1 * 90° ELBOW : E90 * 45° ELBOW : E45 * TEE : T * RED.TEE : TR * STUB-IN : STU * REINFORCING PAD : RP * CON.RED : RC * ECC.RED : RE * CON.SWAGE : RCS/RCS1 * ECC.SWAGE : RES/RES1 * NIPPLE : NP/NP1/NP2 * CAP : CAP/CAP1 * PLUG : PLG * FULL COUPLING : FC * HALF COUPLING : HF/HF1
* STUB-IN : STU * SOCKET(HDPE/PVC) : SC * SADDLE(HDPE) : SD * FLANGE : F/F1 * GASKET : G/G1/G2 * BOLT & NUT : B/B1 * BLIND FLANGE : FB/FB1 * GATE VA. : VG/VG1/VG2 * BALL VA. : VB/VBLO/VB1/VB1LO/VB2/VB2LO * BUTTERFLY VA. : VF/VF4 * CHECK VA. : VC/VC1/VC2/VC3/VC4/VC5/VC6/VC7
* GLOBE VA. : VL/VL1/VL2 * DIAPHRAGM VA. : VD/VDLO * DAMPER : VP * QUICK COUPLING : SOC * FLEXIBLE JOINT(STEEL) : FLXB * FLEXIBLE JOINT(RUBBER) : FLXR * FLEXIBLE JOINT(STEEL PTFE LINED) : FLXL * FLEXIBLE HOSE : FLXH * STEAM TRAP : ST * SPRAY NOZZLE : SPN * EMERGENCY SHOWER : SSH
* STRAINER(Y-TYPE) : YSTR * STRAINER(T-TYPE) : TSTR * STRAINER(BUCKET-TYPE) : BSTR * ANCHOR PLATE : STOP * BIRD SCREEN : BS * ISOLATION KIT : IK * UNLOADING BOX : UB * AIR TRAP : AT * LOTO : LOTO * SIGHT GLASS : SG * PRESSURE GAUGE : PG * SHILED : SH * SPECIAL BOLT & NUT : BL/BL1

CLIENT SK hynix 30

INSULATION	CODE	E
	THICK.	25

CONDITION	PRESS. (kg/cm2g)	TEMP. (°C)
DESIGN	13.5	60
OPERATING	10	AMB

AREA W14
UNIT R2FA
REF. PLAN DWG. CJ-M15W14-PI-A30-020015-B
REF. P & ID CJ-M15W13-PR-A20-000081

REV. NO.	DATE	DESCRIPTION	BY	CHK	APP'D
1	25.03.31	REVISED AS MARKED	황래종	안남후	박동영
0	25.01.24	APPROVED FOR CONSTRUCTION	황래종	안남후	박동영

CONTRACTOR SK ecoplant
PROJECT NAME M15X Ph4 Project
COMMODITY IW
JOB NO. 22330D
LINE NO. 25A-IW-STI-E-7023
SH'T NO. 01 / 01
REV. 1

경고 : 본 도면은 SK HYNIX의 기업비밀 자료로서, 어떠한 경우에도 목적 외 사용, 복제, 제3자에게 공개, 누설 및 유출할 수 없으며, 회사는 유포자의 불법 사용으로 피해가 발생할 경우 유포자에게 민/형사상 책임을 요구할 수 있음.

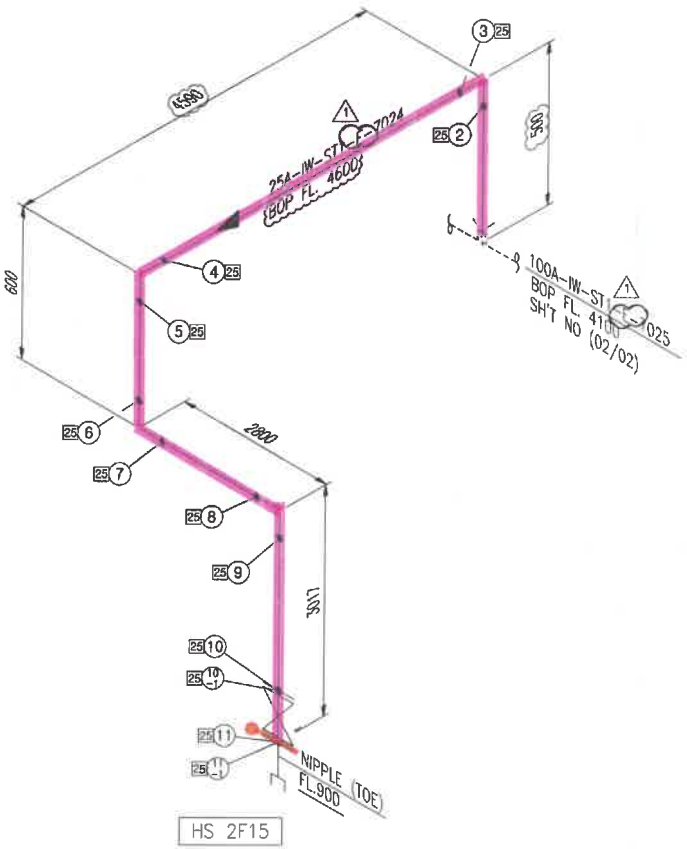

36

<NOTE>
1. (*) FIELD ADJUST

ITEM	SIZE	Q'TY	DESCRIPTION
		ST1	
P	25A	11.0M	PIPE, STS 304TP, ERW, PE - SCH 10S
NP1	25A	1EA	NIPPLE, STS 304TP, ERW, TOE - SCH 40S
E90	25A	4EA	ELBOW 90 DEG, STSF304, SW - SCH 10S
VG	25A	1EA	GATE VALVE, KS 10K, RF FLG'D, BODY-STSF304 /
			TRIM-STS304, BB / OS&Y, HANDWHEEL
F	25A	2EA	FLG SO, KS 10K, RF, STS304
G	25A	2EA	GASKET, KS 10K, RF, PTFE+EPDM, 3.0MM THK
B	25A	2SET	MACHINE BOLT & NUTS :STS 304 / W WASHERS
SQC	25A	1EA	QUICK COUPLING(MALE)
1 INC	25tX25A	11.0M	* 관 보온재(고무발포) + 알루미늄 CASING 1

* PIPE : P/P1 * 90° ELBOW : E90 * 45° ELBOW : E45 * TEE : T * RED.TEE : TR * STUB-IN : STU * REINFORCING PAD : RP * CON.RED : RC * ECC.RED : RE * CON.SWAGE : RCS/RCS1 * ECC.SWAGE : RES/RES1 * NIPPLE : NP/NP1/NP2 * CAP : CAP/CAP1 * PLUG : PLG * FULL COUPLING : FC * HALF COUPLING : HF/HF1
* STUB-IN : STU * SOCKET(HDPE/PVC) : SC * SADDLE(HDPE) : SD * FLANGE : F/F1 * GASKET : G/G1/G2 * BOLT & NUT : B/B1 * BLIND FLANGE : FB/FB1 * GATE VA : VG/VG1/VG2 * BALL VA : VB/VBL0/VB1/VB1L0/VB2/VB2L0 * BUTTERFLY VA : VF/VF4 * CHECK VA : VC/VC1/VC2/VC3/VC4/VC5/VC6/VC7
* GLOBE VA : VL/VL1/VL2 * DIAPHRAGM VA : VD/VDL0 * DAMPER : VP * QUICK COUPLING : SQC * FLEXIBLE JOINT(STEEL) : FLXB * FLEXIBLE JOINT(RUBBER) : FLXR * FLEXIBLE JOINT(STEEL PTFE LINED) : FLXL * FLEXIBLE HOSE : FLXH * STEAM TRAP : ST * SPRAY NOZZLE : SPN * EMERGENCY SHOWER : SSH
* STRAINER(Y-TYPE) : YSTR * STRAINER(T-TYPE) : TSTR * STRAINER(BUCKET-TYPE) : BSTR * ANCHOR PLATE : STOP * BIRD SCREEN : BS * ISOLATION KIT : IK * UNLOADING BOX : UB * AIR TRAP : AT * LOTO : LOTO * SIGHT GLASS : SG * PRESSURE GAUGE : PG * SHILED : SH * SPECIAL BOLT & NUT : BL/BL1

CLIENT SK hynix

31

INSULATION	CODE	E	CONDITION	PRESS. (kg/cm2g)	TEMP. (°C)
	THICK.	25	DESIGN	13.5	60
			OPERATING	10	AMB

AREA W14
UNIT R2FA
REF. PLAN DWG. CJ-M15W14-PI-A30-020016-B
REF. P & ID CJ-M15W13-PR-A20-000081

REV. NO.	DATE	DESCRIPTION	BY	CHK	APP'D
1	25.03.31	REVISED AS MARKED	황래종	안남후	박동영
0	25.01.24	APPROVED FOR CONSTRUCTION	황래종	안남후	박동영

CONTRACTOR SK ecoplant
COMMODITY IW
LINE NO. 25A-IW-ST1-F-7024
PROJECT NAME M15X Ph4 Project
JOB NO. 22330D
SH'T NO. 01 / 01 REV. 1

경고 : 본 도면은 SK HYNIX의 기업비밀 자료로서, 어떠한 경우에도 목적 외 사용, 복제, 제3자에게 공개, 누설 및 유출할 수 없으며, 회사는 유포자의 불법 사용으로 피해가 발생할 경우 유포자에게 민/형사상 책임을 요구할 수 있음.

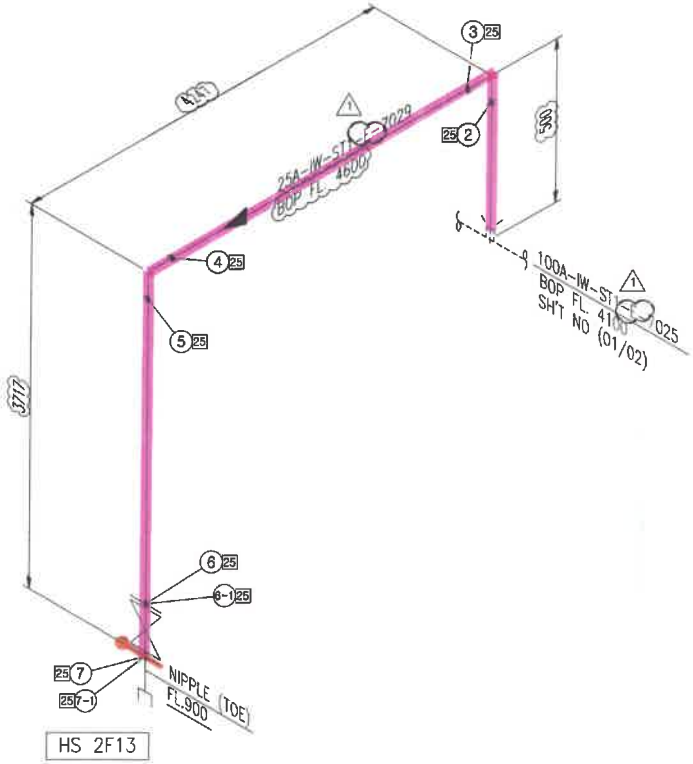

<NOTE>
1. (*) FIELD ADJUST

SK ecoplant

ITEM	SIZE	Q'TY	DESCRIPTION
		ST1	
P	25A	8.3M	PIPE, STS 304TP, ERW, PE – SCH 10S
NP1	25A	1EA	NIPPLE, STS 304TP, ERW, TOE – SCH 40S
E90	25A	2EA	ELBOW 90 DEG, STSF304, SW – SCH 10S
VG	25A	1EA	GATE VALVE, KS 10K, RF FLG'D, BODY-STSF304 /
			TRIM-STS304, BB / OS&Y, HANDWHEEL
F	25A	2EA	FLG SO, KS 10K, RF, STS304
G	25A	2EA	GASKET, KS 10K, RF, PTFE+EPDM, 3.0MM TH'K
B	25A	2SET	MACHINE BOLT & NUTS :STS 304 / W WASHERS
SQC	25A	1EA	~~QUICK COUPLING(MALE)~~
1 INC	25tX25A	8.3M	관 보온재(2무발포) + 일루미늄 CASING 1

* PIPE : P/P1 * 90° ELBOW : E90 * 45° ELBOW : E45 * TEE : T * RED.TEE : TR * STUB-IN : STU * REINFORCING PAD : RP * CON.RED : RC * ECC.RED : RE * CON.SWAGE : RCS/RCS1 * ECC.SWAGE : RES/RES1 * NIPPLE : NP/NP1/NP2 * CAP : CAP/CAP1 * PLUG : PLG * FULL COUPLING : FC * HALF COUPLING : HF/HF1
* STUB-IN : STU * SOCKET(HDPE/PVC) : SC * SADDLE(HDPE) : SD * FLANGE : F/F1 * GASKET : G/G1/G2 * BOLT & NUT : B/B1 * BLIND FLANGE : FB/FB1 * GATE VA. : VG/VG1/VG2 * BALL VA. : VB/VBL0/VB1/VB1L0/VB2/VB2L0 * BUTTERFLY VA. : VF/VF4 * CHECK VA. : VC/VC1/VC2/VC3/VC4/VC5/VC6/VC7
* GLOBE VA. : VL/VL1/VL2 * DIAPHRAGM VA. : VD/VDL0 * DAMPER : VP * QUICK COUPLING : SQC * FLEXIBLE JOINT(STEEL) : FLXB * FLEXIBLE JOINT(RUBBER) : FLXR * FLEXIBLE JOINT(STEEL PTFE LINED) : FLXL * FLEXIBLE HOSE : FLXH * STEAM TRAP : ST * SPRAY NOZZLE : SPN * EMERGENCY SHOWER : SSH
* STRAINER(Y-TYPE) : YSTR * STRAINER(T-TYPE) : TSTR * STRAINER(BUCKET-TYPE) : BSTR * ANCHOR PLATE : STOP * BIRD SCREEN : BS * ISOLATION KIT : IK * UNLOADING BOX : UB * AIR TRAP : AT * LOTO : LOTO * SIGHT GLASS : SG * PRESSURE GAUGE : PG * SHILED : SH * SPECIAL BOLT & NUT : BL/BL1

CLIENT SK hynix 32

INSULATION	CODE	E	CONDITION	PRESS. (kg/cm2g)	TEMP. (°C)
	THICK.	25	DESIGN	13.5	60
			OPERATING	10	AMB

AREA W14
UNIT R2FA
REF. PLAN DWG. CJ-M15W14-PI-A30-020014-B
REF. P & ID CJ-M15W13-PR-A20-000081

REV. NO.	DATE	DESCRIPTION	BY	CHK	APP'D
1	25.03.31	REVISED AS MARKED	황래종	안남후	박동영
0	25.01.24	APPROVED FOR CONSTRUCTION	황래종	안남후	박동영

CONTRACTOR SK ecoplant
PROJECT NAME M15X Ph4 Project
COMMODITY IW
JOB NO. 22330D
LINE NO. 25A-IW-ST-E-7029
SH'T NO. 01 / 01
REV. 1

경고 : 본 도면은 SK HYNIX의 기업비밀 자료로서, 어떠한 경우에도 목적 외 사용, 복제, 제3자에게 공개, 누설 및 유출할 수 없으며, 회사는 유포자의 불법 사용으로 피해가 발생할 경우 유포자에게 민/형사상 책임을 요구할 수 있음.

36

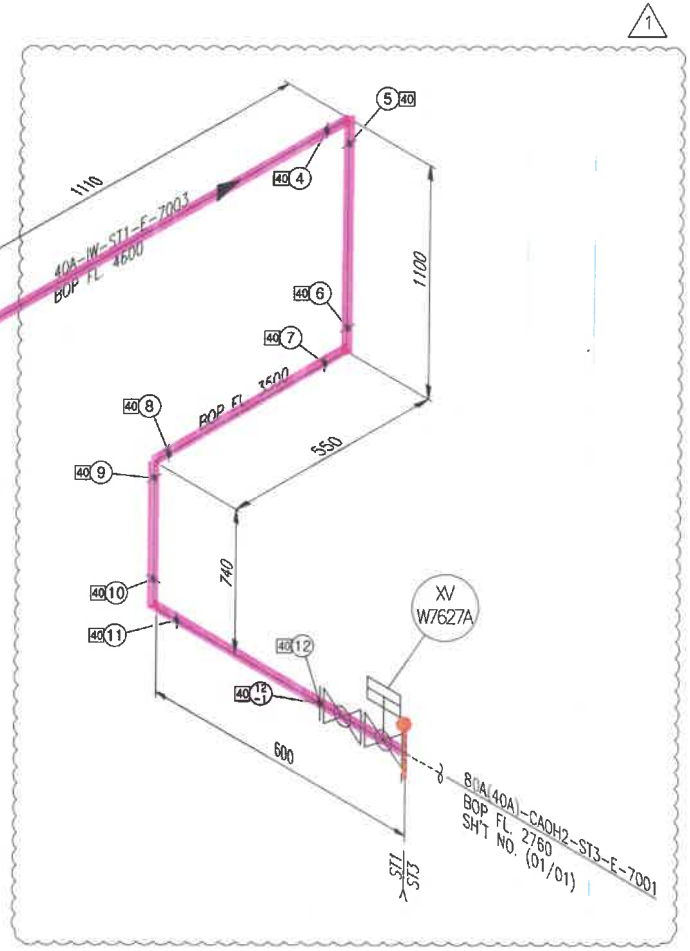

<NOTE>
1. (*) FIELD ADJUST

ITEM	SIZE	Q'TY	DESCRIPTION
		ST1	
P	40A	4.5M	PIPE, STS 304TP, ERW, PE - SCH 10S
E90	40A	5EA	ELBOW 90 DEG, STSF304, SW - SCH 10S
VB	40A	1EA	BALL VALVE, KS 10K, RF FLG'D, BODY-STSF304 / TRIM-STS304 / SEAT-PTFE, FB, LEVER
F	40A	1EA	FLG SO, KS 10K, RF, STS304
G	40A	3EA	GASKET, KS 10K, RF, PTFE+EPDM, 3.0MM TH'K
B	40A	3SET	MACHINE BOLT & NUTS :STS 304 / W WASHERS
INC	25tX40A	4.5M	건 보온재(고무발포) + 알루미늄 CASING

* PIPE : P/P1 * 90' ELBOW : E90 * 45' ELBOW : E45 * TEE : T * RED.TEE : TR * STUB-IN : STU * REINFORCING PAD : RP * CON.RED : RC * ECC.RED : RE * CON.SWAGE : RCS/RCS1 * ECC.SWAGE : RES/RES1 * NIPPLE : NP/NP1/NP2 * CAP : CAP/CAP1 * PLUG : PLG * FULL COUPLING : FC * HALF COUPLING : HF/HF1
* STUB-IN : STU * SOCKET(HDPE/PVC) : SC * SADDLE(HDPE) : SD * FLANGE : F/F1 * GASKET : G/G1/G2 * BOLT & NUT : B/B1 * BLIND FLANGE : FB/FB1 * GATE VA. : VG/VG1/VG2 * BALL VA. : VB/VBLO/VB1/VB1LO/VB2/VB2LO * BUTTERFLY VA. : VF/VF4 * CHECK VA. : VC/VC1/VC2/VC3/VC4/VC5/VC6/VC7
* GLOBE VA. : VL/VL1/VL2 * DIAPHRAGM VA. : VD/VDLO * DAMPER : VP * QUICK COUPLING : SQC * FLEXIBLE JOINT(STEEL) : FLXB * FLEXIBLE JOINT(RUBBER) : FLXR * FLEXIBLE JOINT(STEEL PTFE LINED) : FLXL * FLEXIBLE HOSE : FLXH * STEAM TRAP : ST * SPRAY NOZZLE : SPN * EMERGENCY SHOWER : SSH
* STRAINER(Y-TYPE) : YSTR * STRAINER(I-TYPE) : TSTR * STRAINER(BUCKET-TYPE) : BSTR * ANCHOR PLATE : STOP * BIRD SCREEN : BS * ISOLATION KIT : IK * UNLOADING BOX : UB * AIR TRAP : AT * LOTO : LOTO * SIGHT GLASS : SG * PRESSURE GAUGE : PG * SHILED : SH * SPECIAL BOLT & NUT : BL/BL1

CLIENT SK hynix 33

INSULATION	CODE	E	CONDITION	PRESS. (kg/cm2g)	TEMP. (°C)
	THICK.	25	DESIGN	13.5	60
			OPERATING	10	AMB

AREA W14
UNIT R2FA
REF. PLAN DWG. CJ-M15W14-PI-A30-020015-B
REF. P & ID CJ-M15W13-PR-A20-0000B1

REV. NO.	DATE	DESCRIPTION	BY	CHK	APP'D
1	25.03.31	REVISED AS MARKED	황래종	안남후	박동영
0	25.01.24	APPROVED FOR CONSTRUCTION	황래종	안남후	박동영

CONTRACTOR SK ecoplant
PROJECT NAME M15X Ph4 Project
COMMODITY IW
JOB NO. 22330D
LINE NO. 40A-IW-ST1-E-7003
SH'T NO. 01 / 01
REV. 1

경고 : 본 도면은 SK HYNIX의 기업비밀 자료로서, 어떠한 경우에도 목적 외 사용, 복제, 제3자에게 공개, 누설 및 유출할 수 없으며, 회사는 유포자의 불법 사용으로 피해가 발생할 경우 유포자에게 민/형사상 책임을 요구할 수 있음.

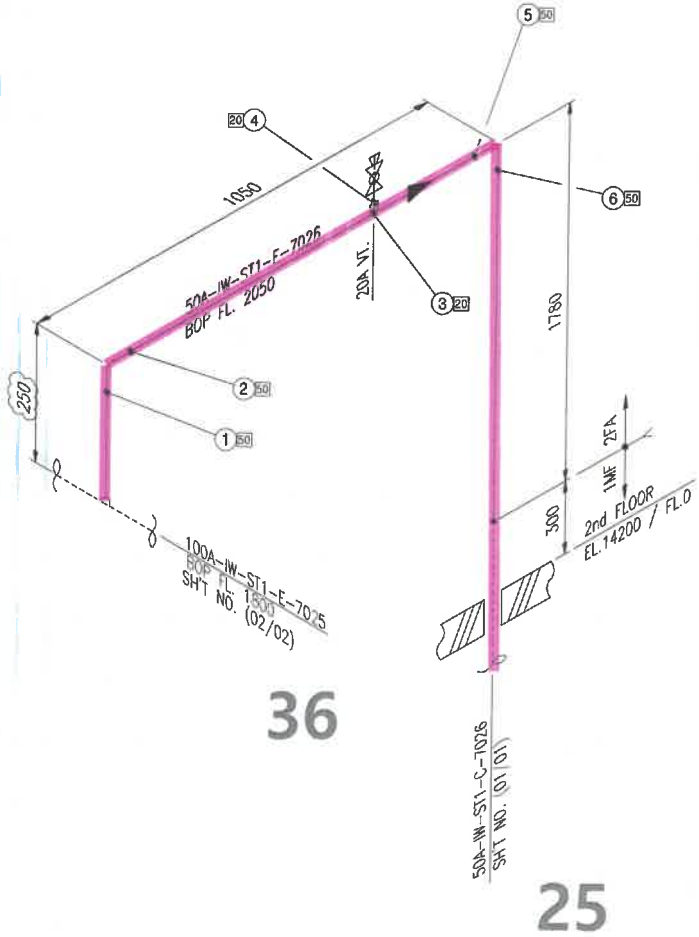

<NOTE>
1. (*) FIELD ADJUST

ITEM	SIZE	Q'TY	DESCRIPTION
		ST1	
P	50A	2.9M	PIPE, STS 304TP, ERW, BE - SCH 10S
E90	50A	2EA	ELBOW 90 DEG LR, STS304, ERW, BE - SCH 10S
NP1	20A	1EA	NIPPLE, STS 304TP, ERW, TOE - SCH 40S
HF	20A	1EA	COUPLING HALF, STSF304, SW - SCH 10S
PLG	20A	1EA	PLUG ROUND HEAD, STSF304, SCR'D
VB1	20A	1EA	BALL VALVE, KS 10K, SCR'D, BODY-STSF304 /
			TRIM-STS304 / SEAT-PTFE, FB, LEVER
INC	25tX50A	2.9M	관 보온재(고무발포) + 알루미늄 CASING

* PIPE : P/P1 * 90° ELBOW : E90 * 45° ELBOW : E45 * TEE : T * RED.TEE : TR * STUB-IN : STU * REINFORCING PAD : RP * CON.RED : RC * ECC.RED : RE * CON.SWAGE : RCS/RCS1 * ECC.SWAGE : RES/RES1 * NIPPLE : NP/NP1/NP2 * CAP : CAP/CAP1 * PLUG : PLG * FULL COUPLING : FC * HALF COUPLING : HF/HF1
* STUB-IN : STU * SOCKET(HDPE/PVC) : SC * SADDLE(HDPE) : SD * FLANGE : F/F1 * GASKET : G/G1/G2 * BOLT & NUT : B/B1 * BLIND FLANGE : FB/FB1 * GATE VA. : VG/VG1/VG2 * BALL VA. : VB/VB1.0/VB1/VB1L0/VB2/VB2L0 * BUTTERFLY VA. : VF/VF4 * CHECK VA. : VC/VC1/VC2/VC3/VC4/VC5/VC6/VC7
* GLOBE VA. : VL/VL1/VL2 * DIAPHRAGM VA. : VD/VDL0 * DAMPER : VP * QUICK COUPLING : SQC * FLEXIBLE JOINT(STEEL) : FLXB * FLEXIBLE JOINT(RUBBER) : FLXR * FLEXIBLE JOINT(STEEL, PTFE LINED) : FLXL * FLEXIBLE HOSE : FLXH * STEAM TRAP : ST * SPRAY NOZZLE : SPN * EMERGENCY SHOWER : SSH
* STRAINER(Y-TYPE) : YSTR * STRAINER(T-TYPE) : TSTR * STRAINER(BUCKET-TYPE) : BSTR * ANCHOR PLATE : STOP * BIRD SCREEN : BS * ISOLATION KIT : IK * UNLOADING BOX : UB * AIR TRAP : AT * LOTO : LOTO * SIGHT GLASS : SG * PRESSURE GAUGE : PG * SHILED : SH * SPECIAL BOLT & NUT : BL/BL1

CLIENT SK hynix 34

INSULATION	CODE	E	CONDITION	PRESS. (kg/cm2g)	TEMP. (°C)
	THICK.	-	DESIGN	10	60
			OPERATING	7.5	AMB

AREA W14
UNIT R2FA
REF. PLAN DWG. CJ-M15W14-PI-A30-020015-A
REF. P & ID CJ-M15W13-PR-A20-000081

REV. NO.	DATE	DESCRIPTION	BY	CHK	APP'D
0	25.01.24	APPROVED FOR CONSTRUCTION	황래원	안남후	박동영

CONTRACTOR SK ecoplant
PROJECT NAME M15X Ph4 Project
COMMODITY IW
JOB NO. 22330D
LINE NO. 50A-IW-ST1-E-7026
SH'T NO. 01 / 01
REV. 0

경고 : 본 도면은 SK HYNIX의 기업비밀 자료로서, 어떠한 경우에도 목적 외 사용, 복제, 제3자에게 공개, 누설 및 유출할 수 없으며, 회사는 유포자의 불법 사용으로 피해가 발생할 경우 유포자에게 민/형사상 책임을 요구할 수 있음.

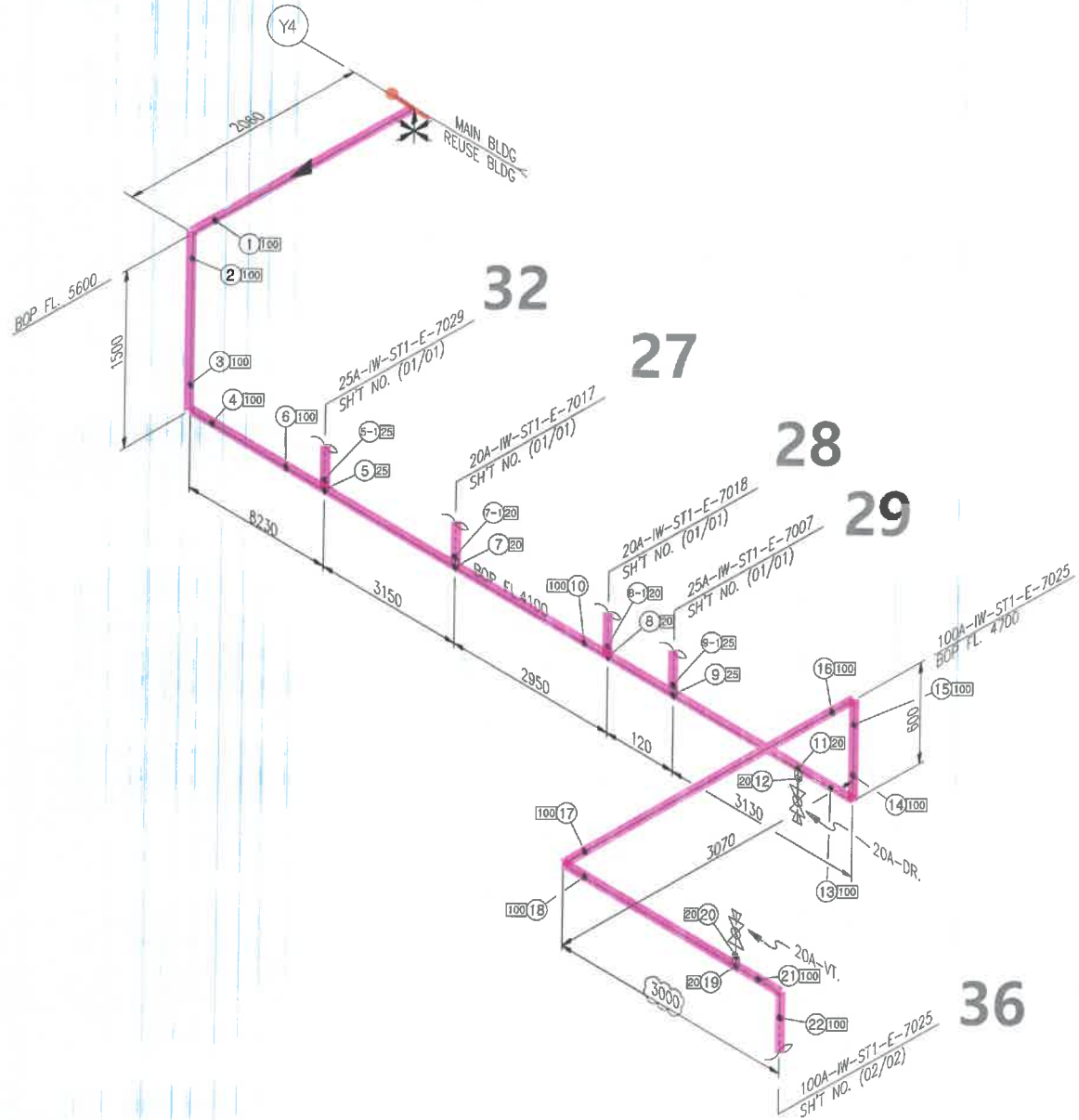

N

<NOTE>
1. (*) FIELD ADJUST

SK ecoplant

ITEM	SIZE	Q'TY	DESCRIPTION
		ST1	
P	100A	27.9M	PIPE, STS 304TP, ERW, BE - SCH 10S
E90	100A	6EA	ELBOW 90 DEG LR, STS304, ERW, BE - SCH 10S
NP1	20A	2EA	NIPPLE, STS 304TP, ERW, TOE - SCH 40S
HF	25A	2EA	COUPLING HALF, STSF304, SW - SCH 10S
HF	20A	4EA	COUPLING HALF, STSF304, SW - SCH 10S
VB1	20A	2EA	BALL VALVE, KS 10K, SCR'D, BODY-STSF304 /
			TRIM-STS304 / SEAT-PTFE, FB, LEVER
PLG	20A	2EA	PLUG ROUND HEAD, STSF304, SCR'D
INC	25tX100A	27.9M	관 보온재(고무발포) + 알루미늄 CASING

* PIPE : P/P1 * 90° ELBOW : E90 * 45° ELBOW : E45 * TEE : T * RED.TEE : TR * STUB-IN : STU * REINFORCING PAD : RP * CON.RED : RC * ECC.RED : RE * CON.SWAGE : RCS/RCS1 * ECC.SWAGE : RES/RES1 * NIPPLE : NP/NP1/NP2 * CAP : CAP/CAP1 * PLUG : PLG * FULL COUPLING : FC * HALF COUPLING : HF/HF1
* STUB-IN : STU * SOCKET(HDPE/PVC) : SC * SADDLE(HDPE) : SD * FLANGE : F/F1 * GASKET : G/G1/G2 * BOLT & NUT : B/B1 * BLIND FLANGE : FB/FB1 * GATE VA. : VG/VG1/VG2 * BALL VA. : VB/VB1.0/VB1/VB1.1.0/VB2/VB2.1.0 * BUTTERFLY VA. : VF/VF4 * CHECK VA. : VC/VC1/VC2/VC3/VC4/VC5/VC6/VC7
* GLOBE VA. : VL/VL1/VL2 * DIAPHRAGM VA. : VD/VD1.0 * DAMPER : VP * QUICK COUPLING : SQC * FLEXIBLE JOINT(STEEL) : FLXB * FLEXIBLE JOINT(RUBBER) : FLXR * FLEXIBLE JOINT(STEEL PTFE LINED) : FLXL * FLEXIBLE HOSE : FLXH * STEAM TRAP : ST * SPRAY NOZZLE : SPN * EMERGENCY SHOWER : SSH
* STRAINER(Y-TYPE) : YSTR * STRAINER(T-TYPE) : TSTR * STRAINER(BUCKET-TYPE) : BSTR * ANCHOR PLATE : STOP * BIRD SCREEN : BS * ISOLATION KIT : IK * UNLOADING BOX : UB * AIR TRAP : AT * LOTO : LOTO * SIGHT GLASS : SG * PRESSURE GAUGE : PG * SHIELD : SH * SPECIAL BOLT & NUT : BL/BLT

CLIENT SK hynix

35

INSULATION	CODE	E	CONDITION	PRESS. (kg/cm2g)	TEMP. (°C)
	THICK.	25	DESIGN	10	60
			OPERATING	7.5	AMB

AREA W14
UNIT 2FA
REF. PLAN DWG. CJ-M15W14-P1-A30-D10017-D
REF. P & ID CJ-M15W13-PR-A20-000081

REV. NO.	DATE	DESCRIPTION	BY	CHK	APP'D
0	25.01.24	APPROVED FOR CONSTRUCTION	황래중	안남후	박동원

CONTRACTOR SK ecoplant
PROJECT NAME M15X Ph4 Project
COMMODITY IW
JOB NO. 22330D
LINE NO. 100A-IW-ST1-E-7025
SH'T NO. 01 / 02
REV. 0

경고 : 본 도면은 SK HYNIX의 기업비밀 자료로서, 이러한 경우에도 목적 외 사용, 복제, 제3자에게 공개, 누설 및 유출할 수 없으며, 회사는 유포자의 불법 사용으로 피해가 발생할 경우 유포자에게 민/형사상 책임을 요구할 수 있음.

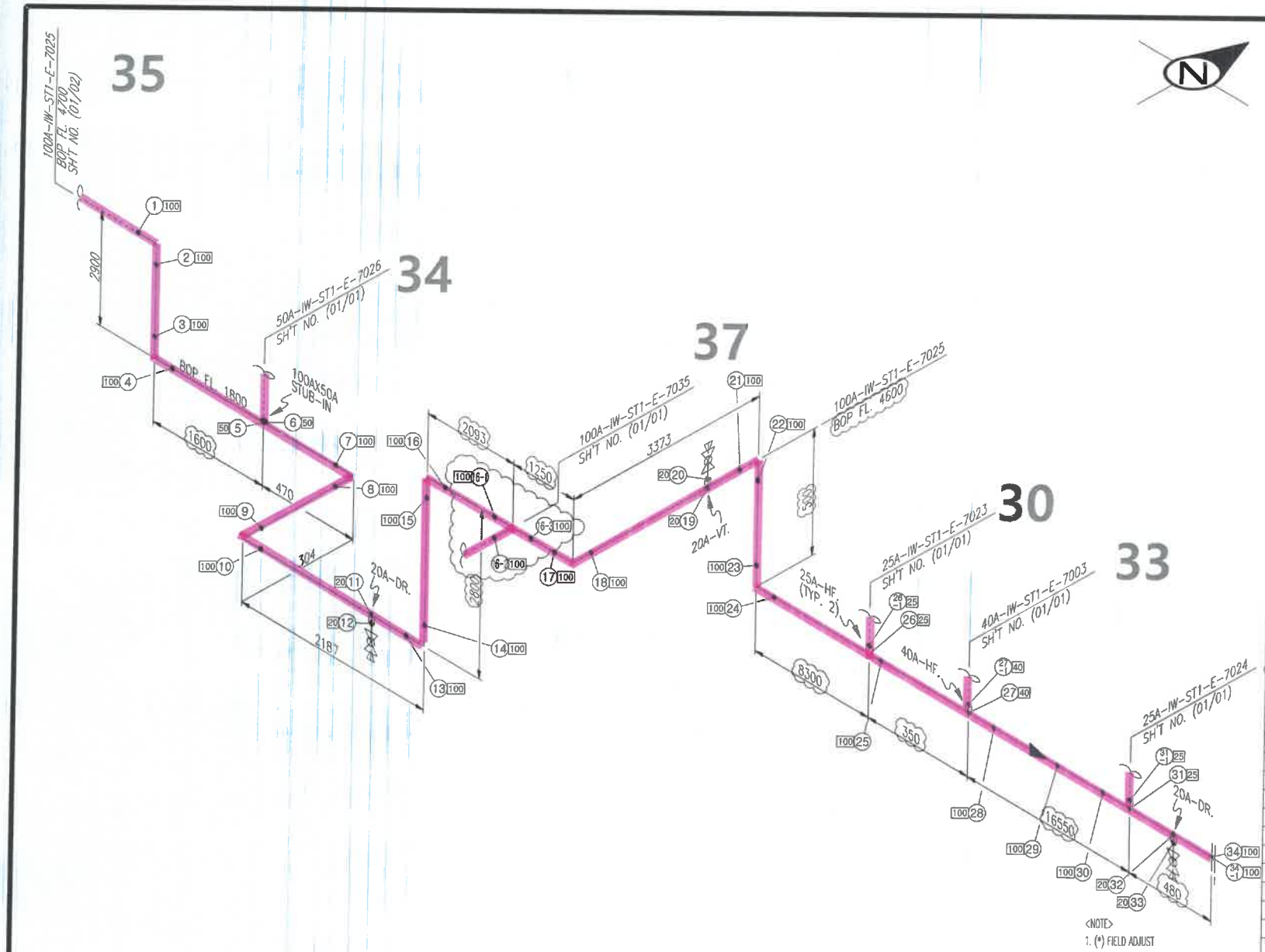

SK ecoplant

ITEM	SIZE	Q'TY	DESCRIPTION
		ST1	
P	100A	43.4M	PIPE, STS 304TP, ERW, BE – SCH 10S
E90	100A	9EA	ELBOW 90 DEG LR, STS304, ERW, BE – SCH 10S
T	100A	1EA	TEE EQUAL, STSF304, SW – SCH 10S
NP1	20A	3EA	NIPPLE, STS 304TP, ERW, TOE – SCH 40S
STU	100AX50A	1EA	STUB-IN BRANCH
HF	40A	1EA	COUPLING HALF, STSF304, SW – SCH 10S
HF	25A	2EA	COUPLING HALF, STSF304, SW – SCH 10S
HF	20A	3EA	COUPLING HALF, STSF304, SW – SCH 10S
VB1	20A	3EA	BALL VALVE, KS 10K, SCR'D, BODY-STSF304 /
			TRIM-STS304 / SEAT-PTFE, FB. LEVER
PLG	20A	3EA	PLUG ROUND HEAD, STSF304, SCR'D
F	100A	1EA	FLG SO, KS 10K, RF, STS304
FB	100A	1EA	FLG BLIND, KS 10K, RF, STS304
G	100A	1EA	GASKET, KS 10K, RF, PTFE+EPDM, 3.0MM TH'K
B	100A	1SET	MACHINE BOLT & NUTS :STS 304 / W WASHERS
INC	25tX100A	43.4M	관 보온재(고무발포) + 알루미늄 CASING

* PIPE : P/P1 * 90° ELBOW : E90 * 45° ELBOW : E45 * TEE : T * RED.TEE : TR * STUB-IN : STU * REINFORCING PAD : RP * CON.RED : RC * ECC.RED : RE * CON.SWAGE : RCS/RCS1 * ECC.SWAGE : RES/RES1 * NIPPLE : NP/NP1/NP2 * CAP : CAP/CAP1 * PLUG : PLG * FULL COUPLING : FC * HALF COUPLING : HF/HF1
* STUB-IN : STU * SOCKET(HDPE/PVC) : SC * SADDLE(HDPE) : SD * FLANGE : F/F1 * GASKET : G/G1/G2 * BOLT & NUT : B/B1 * BLIND FLANGE : FB/FB1 * GATE VA. : VG/VG1/VG2 * BALL VA. : VB/VBLO/VB1/VB1LO/VB2/VB2LO * BUTTERFLY VA. : VF/VF4 * CHECK VA. : VC/VC1/VC2/VC3/VC4/VC5/VC6/VC7
* GLOBE VA. : VL/VL1/VL2 * DIAPHRAGM VA. : VD/VDLO * DAMPER : VP * QUICK COUPLING : SQC * FLEXIBLE JOINT(STEEL) : FLXB * FLEXIBLE JOINT(RUBBER) : FLXR * FLEXIBLE JOINT(STEEL PTFE LINED) : FLXL * FLEXIBLE HOSE : FLXH * STEAM TRAP : ST * SPRAY NOZZLE : SPN * EMERGENCY SHOWER : SSH
* STRAINER(Y-TYPE) : YSTR * STRAINER(I-TYPE) : ISTR * STRAINER(BUCKET-TYPE) : BSTR * ANCHOR PLATE : STOP * BIRD SCREEN : BS * ISOLATION KIT : IK * UNLOADING BOX : UB * AIR TRAP : AT * LOTO : LOTO * SIGHT GLASS : SG * PRESSURE GAUGE : PG * SHILED : SH * SPECIAL BOLT & NUT : BL/BL1

CLIENT SK hynix 36

INSULATION	CODE	E	CONDITION	PRESS. (kg/cm2g)	TEMP. (°C)
	THICK.	25	DESIGN	10	60
			OPERATING	7.5	AMB

AREA W14
UNIT 2FA
REF. PLAN DWG. CJ-M15W14-PI-A30-020015-A
REF. P & ID CJ-M15W13-PR-A20-000081

REV. NO.	DATE	DESCRIPTION	BY	CHK	APP'D
0	25.01.24	APPROVED FOR CONSTRUCTION	황래종	안남후	박동영

CONTRACTOR SK ecoplant
PROJECT NAME M15X Ph4 Project
COMMODITY IW
JOB NO. 22330D
LINE NO. 100A-IW-ST1-E-7025
SH'T NO. 02 / 02
REV. 0

경고 : 본 도면은 SK HYNIX의 기업비밀 자료로서, 어떠한 경우에도 목적 외 사용, 복제, 제3자에게 공개, 누설 및 유출할 수 없으며, 회사는 유포자의 불법 사용으로 피해가 발생할 경우 유포자에게 민/형사상 책임을 요구할 수 있음.

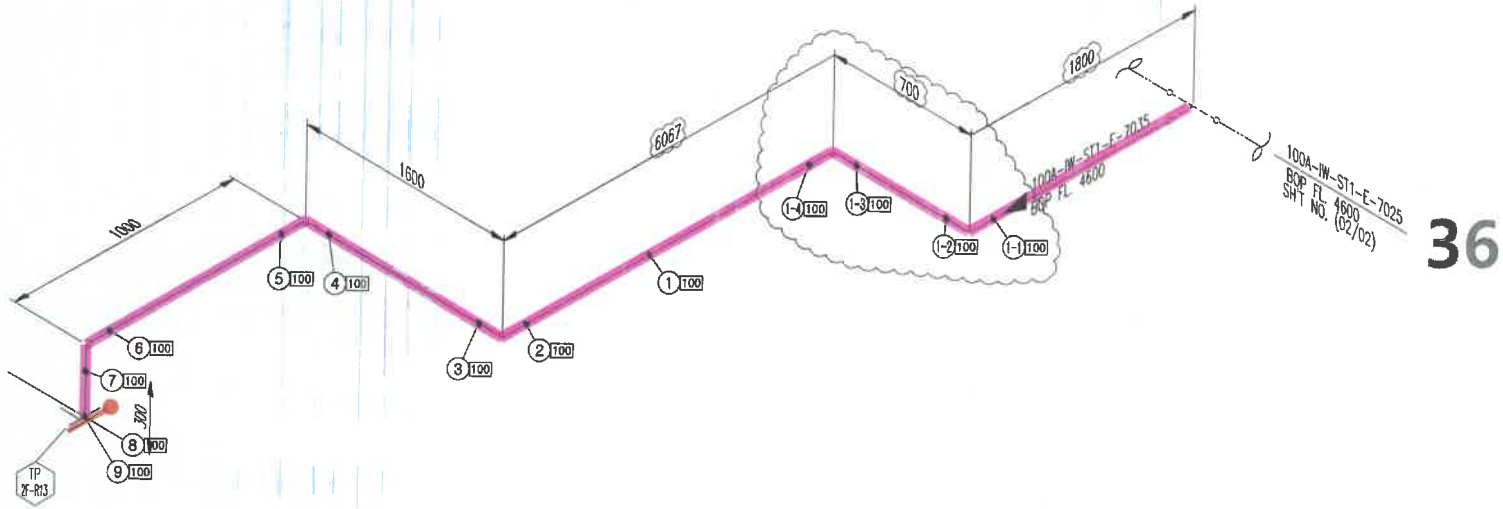

36

ITEM	SIZE	Q'TY	DESCRIPTION
		ST1	
P	100A	10.8M	PIPE, STS 304TP, ERW, BE – SCH 10S
E90	100A	5EA	ELBOW 90 DEG LR, STS304, ERW, BE – SCH 10S
F	100A	1EA	FLG SO, KS 10K, RF, STS304
G	100A	1EA	GASKET, KS 10K, RF, PTFE+EPDM, 3.0MM TH'K
B	100A	1SET	MACHINE BOLT & NUTS :STS 304 / W WASHERS
INC	25tX100A	10.8M	관 보온재(고무발포) + 알루미늄 CASING

<NOTE>
1. (*) FIELD ADJUST

* PIPE : P/P1 * 90° ELBOW : E90 * 45° ELBOW : E45 * TEE : T * RED.TEE : TR * STUB-IN : STU * REINFORCING PAD : RP * CON.RED : RC * ECC.RED : RE * CON.SWAGE : RCS/RCS1 * ECC.SWAGE : RES/RES1 * NIPPLE : NP/NP1/NP2 * CAP : CAP/CAP1 * PLUG : PLG * FULL COUPLING : FC * HALF COUPLING : HF/HF1
* STUB-IN : STU * SOCKET(HDPE/PVC) : SC * SADDLE(HDPE) : SD * FLANGE : F/F1 * GASKET : G/G1/G2 * BOLT & NUT : B/B1 * BLIND FLANGE : FB/FB1 * GATE VA. : VG/VG1/VG2 * BALL VA. : VB/VBLD/VB1/VB1LO/VB2/VB2LO * BUTTERFLY VA. : VF/VF4 * CHECK VA. : VC/VC1/VC2/VC3/VC4/VC5/VC6/VC7
* GLOBE VA. : VL/VL1/VL2 * DIAPHRAGM VA. : VD/VDLO * DAMPER : VP * QUICK COUPLING : SQC * FLEXIBLE JOINT(STEEL) : FLXB * FLEXIBLE JOINT(RUBBER) : FLXR * FLEXIBLE JOINT(STEEL PTFE LINED) : FLXL * FLEXIBLE HOSE : FLXH * STEAM TRAP : ST * SPRAY NOZZLE : SPN * EMERGENCY SHOWER : SSH
* STRAINER(Y-TYPE) : YSTR * STRAINER(T-TYPE) : TSTR * STRAINER(BUCKET-TYPE) : BSTR * ANCHOR PLATE : STOP * BIRD SCREEN : BS * ISOLATION KIT : IK * UNLOADING BOX : UB * AIR TRAP : AT * LOTO : LOTO * SIGHT GLASS : SG * PRESSURE GAUGE : PG * SHIELD : SH * SPECIAL BOLT & NUT : BL/NU

INSULATION	CODE	E	CONDITION	PRESS. (kg/cm2g)	TEMP. (°C)
	THICK.	25	DESIGN	13.5	60
			OPERATING	10	AMB

AREA W14
UNIT R2FA
REF. PLAN DWG. CJ-M15W14-PI-A30-020015-B
REF. P & ID CJ-M15W13-PR-A20-000507

REV. NO.	DATE	DESCRIPTION	BY	CHK	APP'D
0	25.03.31	APPROVED FOR CONSTRUCTION	왕래종	안남후	박동영

CLIENT SK hynix

37

CONTRACTOR SK ecoplant

PROJECT NAME M15X Ph4 Project

COMMODITY IW

JOB NO. 22330D

LINE NO. 100A-IW-ST1-E-7035

SH'T NO. 01 / 01

REV. 0

경고 : 본 도면은 SK HYNIX의 기업비밀 자료로서, 어떠한 경우에도 목적 외 사용, 복제, 제3자에게 공개, 누설 및 유출할 수 없으며, 회사는 유포자의 불법 사용으로 피해가 발생할 경우 유포자에게 민/형사상 책임을 요구할 수 있음.

PUNCH LIST

Project No : 22330D

Project Title : M15X Ph3 Project

Package No :

Date :

S/N	Drawing No	Description	Category A B C	Punch Clear Status			
				작성자		확인자	
				Name	Sign	Name	Sign
1							
2							
3							
4							
5							
6							
7							
8							
9							
10							
11							
12							
13							
14							
15							

Remarks

A : Before Hydro Test

B : Before M/C

C : Before Commissioning